UCUF141, UCUF191, UCUF241 and UCUF281 -86c Series

Upright UltraCold Freezers

Industrial Freezer Sales
A Division of IDS

Industrial Freezer Sales

A Division of IDS
5311 Derry Avenue
Building D
Agoura Hills CA 91301
Phone (818) 597-4300
Fax (818) 597-4301

E-mail to:
service@freezerlink.com

Installation, Operation and Maintenance Instructions for -86°C Ultra-Low Upright Freezer

INSPECTION

When the equipment is received, all items should be carefully checked against the bill of lading to ensure all crates and cartons have been received. All units should be inspected for concealed damage by uncrating the units immediately. If any damage is found, it should be reported to the carrier at once and a claim should be filed with the carrier. This equipment has been inspected and tested in the manufacturing facility and has been crated in accordance with transportation rules and guidelines. Manufacturer is not responsible for freight loss or damage.

Table of Contents

 There are potential electrical hazards and only qualified persons should perform any procedures associated with this symbol.

 Extreme cold temperature hazards are associated with this type of equipment. Use personal protective equipment when handling.

 Extreme hot temperature hazards are associated with this type of equipment. Use personal protective equipment when handling.

 Marking of electrical and electronic equipment which applies to electrical and electronic equipment falling under Directive 2002/96/EC (WEEE) and equipment that has been put on the market after August 13, 2005.

WARRANTY EXCLUSIONS

IT IS EXPRESSLY UNDERSTOOD AND AGREED THAT EACH OF THE WARRANTIES SET FORTH HEREIN ARE EXCLUSIVE AND IN LIEU OF ALL OTHER WARRANTIES, EXPRESS OR IMPLIED, INCLUDING THE IMPLIED WARRANTIES OF MERCHANTABILITY AND FITNESS FOR A PARTICULAR PURPOSE.

UNDER NO CIRCUMSTANCES WHATSOEVER SHALL THE MANUFACTURER BE LIABLE TO PURCHASER FOR LOSS OF USE, REVENUE OR PROFIT OR FOR ANY OTHER INDIRECT, INCIDENTAL, SPECIAL OR CONSEQUENTIAL DAMAGES, INCLUDING, BUT NOT LIMITED TO, LOSSES INVOLVING PRODUCT LOSS.

UNCRATING INSTRUCTIONS

1. After unit is received and inspected, remove shrink wrap and outer cardboard.
2. Remove (4) bolts using a 9/16” socket and wrench as illustrated.
3. Remove (4) screws using #2 Phillips screwdriver from the pallet as illustrated.
4. Remove spacers (2) and spacer ramp (2) from pallet.
5. Place ramp under edge of pallet as illustrated in Detail A.
6. Ensure there is room for the cabinet to clear the ramp.
7. **Caution!!** Use two or more people to guide the cabinet down the ramp.

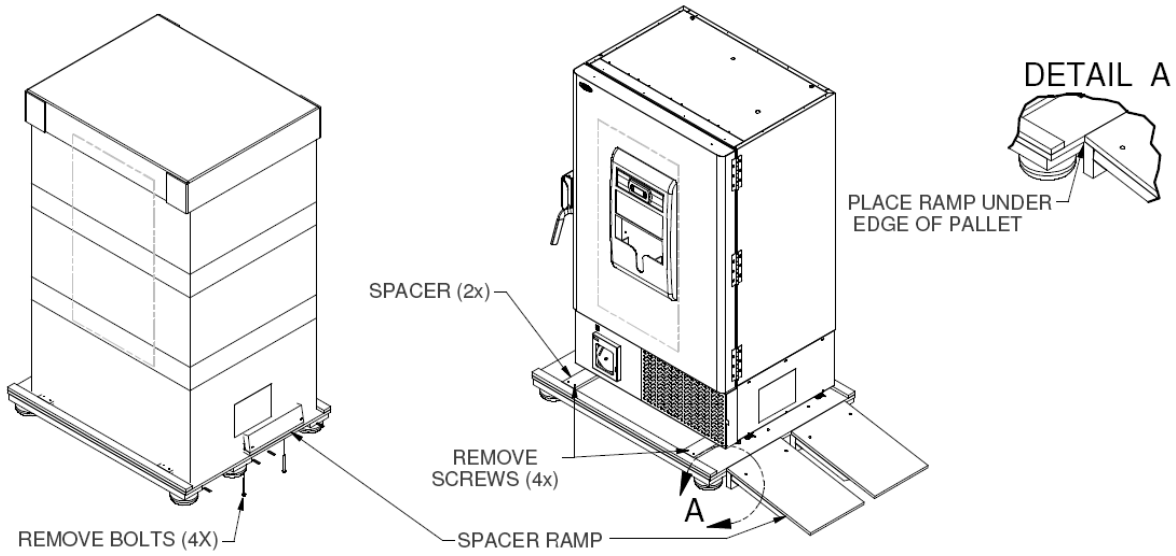

1. INSTALLATION

1.1 Location and Set-Up

The freezer can be easily moved to the desired location. The refrigeration system located at the bottom of the cabinet requires free air access for proper operation. Allow a minimum five (5) inch clearance on the top, rear, and sides of the cabinet. The cabinet should be leveled when it is placed in its permanent location. The leveling feet are located at the front corners under the base. Lower these down until they make contact with the floor and adjust until the unit is completely level. When the freezer is level set the front caster brakes for safety.

Confirm door seals properly, if adjustment is needed, strike plate and hinges can be loosened and adjusted.

There may be a number of accessories crated inside the cabinet (rear spacers, eraser kit, instruction manuals, etc) so use care when discarding packaging material.

Note: For optimum performance the ambient temperature should be between 18°c and 30°c.

Note: If the freezer was tipped more than 45°, leave the unit sit upright for 24 hours before powering up.

1.2 Shelf Installation

The shelves have been factory installed at standard locations to align with the inner doors but can be adjusted as needed. To adjust the shelf, remove the shelf by tilting it to one side and pull toward you to clear the tab at the rear of the shelf. Raise shelf bracket up slightly, and then remove the shelf bracket. Identify preferred location and re-install making sure bracket is securely installed, repeat for opposite side but make sure to count the slots down to get the shelf level, then re-install shelf.

Note: Maximum shelf loading is 120 lbs (54.4 kg) per shelf.

1.3 Remote Alarm Contacts

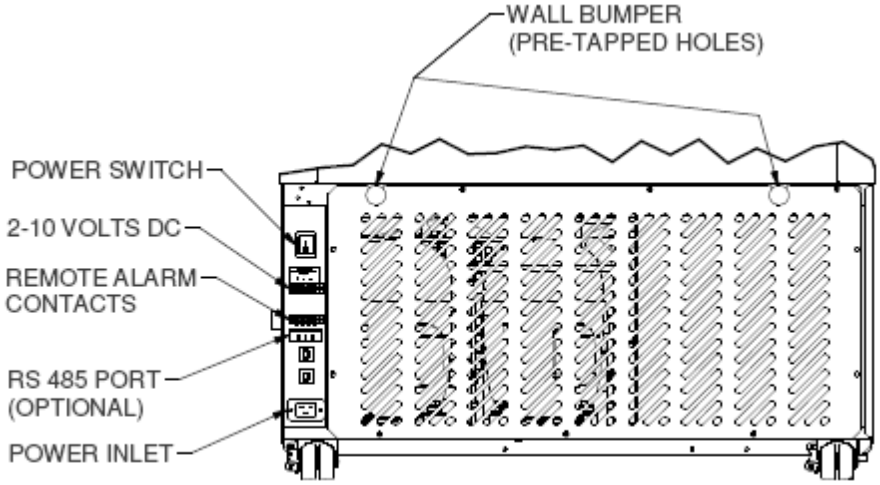

Figure 1.3 Rear view of cabinet components

The remote alarm contacts are located on the rear of the unit as illustrated above. The contacts have a NO (normally open), NC (normally closed) and a C (common) pin. These pins provide a path to a dry contact relay. The NO-C combination will remain open until an alarm condition or loss of power occurs. The NC-C combination will remain closed until an alarm condition or loss of power occurs. See Section 6 Programmable Controller for all possible alarm conditions.

1.4 Electrical

Check the proposed outlet to be used to insure that the voltage, phase, and current carrying capacity of the circuit from the electrical panel correspond to the requirements of the cabinet on the serial tag. NEVER use an extension cord to wire any unit. Refer to the serial tag for all pertinent electrical information. See Figure 1.4 for assistance.

Figure 1.4

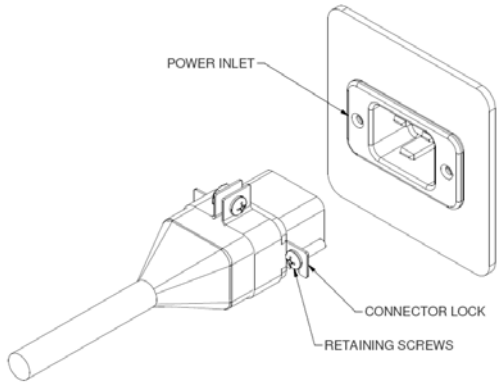

Always connect the freezer to a dedicated (separate) circuit. Each freezer is equipped with a service cord and plug designed to connect it to a power outlet which delivers the correct voltage. Supply voltage must be within 10%, -5% of the rated freezer voltage on the serial tag.

Observe all Warning Labels. Disconnect power supply to eliminate injury from electrical shock or moving parts when servicing equipment.

1.5 Installing Wall Spacers

Thread and tighten the bolts into the pre-tapped holes on the back of the cabinet located at the compressor section. Refer to Figure 1.3 for the location of the holes.

2. GENERAL OPERATION

This cabinet model employs a forced air condenser located in the bottom compartment of the cabinet as the heat removing source. Through the refrigeration process, heat is captured in the cold wall evaporator, transferred to the condensing unit in the bottom of the cabinet, and the heat is expelled to the surrounding outside air. It is extremely important to allow a five (5) inch clearance on the top, rear, and sides of the unit for the refrigeration process to function properly.

This model utilizes a programmable controller to control the temperature. The controller, which is located on the door of the unit, is factory set at -80°c for optimum performance. Please see the default settings sheet and instructions on the operation of this controller in **Section 6**.

3. GENERAL MAINTENANCE

3.1 Periodic Cleaning

Beginning with the initial installation, the interior surfaces of the cabinet may frost over once the initial pull down has started. Occasionally the frost/snow buildup on the shelves and bottom of the cabinet will need to be removed. This can be accomplished by a small whisk broom or a towel. The exterior of the cabinet should also be cleaned frequently with a commercial grade glass cleaner.

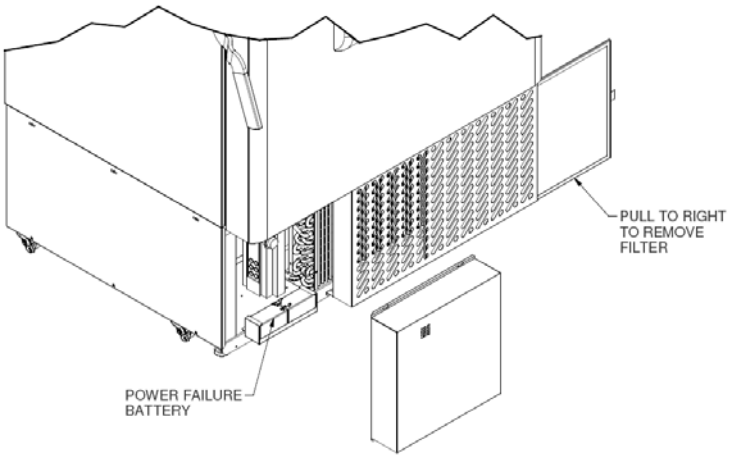

Figure 3.2: Battery replacement and condenser filter cleaning

3.2 Condenser Filter

Cleaning of the condenser filter should be performed every ninety days or sooner if located in a dust prone environment. The programmable controller is preset at the factory to alarm at ninety days and can be set to alarm sooner if necessary. The washable filter is located at the lower right front of the cabinet. Remove filter by grabbing the loop at the right and pull it up then straight out to the side. Shake the filter to remove loose dust, rinse the filter in clean water, shake the excess water from the filter and slide it back into the channel until it stops. The condenser should be cleaned at least once per year. A clean coil/filter will aid in the heat transfer characteristics of the refrigeration system and increase its efficiency.

Dust, dirt, and lint will tend to accumulate on the condensing unit filter. This obstruction will affect the flow of air through the condenser, thereby lowering the efficiency of the system. **Failure to keep the condenser coil/filter clean and clear of obstructions could result in temperature loss and damage to the compressor.**

All moving parts have been permanently lubricated and will generally require no maintenance.

3.2a Alternate Filter Removal

(If side access is not possible) remove screws from top of façade, tip ahead and remove from cabinet. Remove and clean filter. Reverse procedure to re-install.

3.3 Battery Replacement

Rechargeable batteries degrade over time and should be replaced after three years.
Refer to Figure 3.2 for battery location.

1. Use a Phillips screwdriver to remove the 2 screws at the top of the bottom left panel. Loosen the bottom 2 screws (if applicable) and remove the panel.
2. Remove the batteries.
3. Disconnect the 4 battery leads from the batteries.
4. Install new batteries into the bracket; reconnect the battery leads paying close attention to positive and negative terminals.
5. Replace the front cover and tighten the screws.

Note: The low battery indicator will light up at the bottom right corner of the display but should go out after the batteries are installed. If it remains lit, this indicates the new batteries are not fully charged and will go off after reaching a full charge.

3.4 Manual Defrost Freezer

This is a cold wall freezer model which employs evaporator tubing attached to the sidewalls, back, top and bottom of the unit. During the refrigeration process, heat is removed through the evaporator tubing and expelled through the condensing unit. It will be necessary to occasionally manually defrost the freezer when frost has accumulated. To do this, remove all product and place in another cabinet. Unplug the unit, open the door and allow the interior to warm to room ambient. Wipe the cabinet dry with a soft cloth when defrosting is complete. Power up cabinet and allow it to get back to set point temperature before reloading the product.

3.5 Vacuum Relief Port Maintenance

Since the exterior gaskets have 5 points of contact, 3 on the cabinet and 2 on the door, a vacuum can be created. This happens when warm air enters the cabinet, cools and condenses, creating a vacuum that will make re-entry into the cabinet impossible for some time.

The vacuum relief port is installed on the left side in the top compartment. It is equipped with a defrost heater and should never need any maintenance. Remove any ice/frost that may build up and cause an obstruction. Use caution not to damage check valve. See Figure 3.5 on next page.

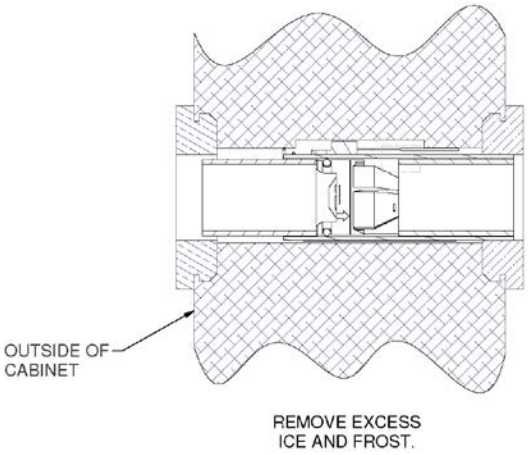

Figure 3.5

3.6 Gasket Maintenance

Inspect the door gasket periodically for frost, punctures or tears. Leaks are indicated by a streak of frost which will form at the point of puncture or poor door seal. Keep the door gasket clean by wiping it gently with a soft cloth.

4. FEATURES AND SPECIFICATIONS

4.1 Construction

Pressure-foamed CFC-Free urethane insulation is around three sides of the freezer, top, bottom and door.
High-impact, smooth, scratch and corrosion resistant painted exterior and smooth white painted interior provides attractive appearance and easy to clean surfaces.
Interior and exterior of the freezer cabinet are painted cold-rolled steel. Cold-rolled steel enhances freezer refrigeration performance.
Combination cabinet mounted multi-bulb door perimeter gaskets provide five multiple points of door sealing. Ensures reliable frost resistant performance and enhances energy efficient cold performance for long term sample security and storage.
Five Interior inner doors are independently hinged and constructed of insulating material with a magnetic catch. This reduces cold loss during door openings and sample retrieval.
There are five internal storage compartments with four heavy duty stainless steel shelves. Shelves are adjustable in 1 inch increments. The shelving configuration is compatible with optional stainless steel storage racks, fiberboard boxes and dividers for multiple storage needs.
Cold wall evaporator design provides superior refrigerant flow and maximizes cooling power by ensuring that the evaporator is always 100% in contact with the freezer wall, maximizing cold transfer into the freezer and heat removal from the chamber.
Easy open integrated door latch and handle allows one-handed opening and closing.
Door latch with padlock and key lock for added security and protected access to freezer contents.
Three adjustable heavy-duty industrial grade hinges ensure outer door fit and positive seal.
Exclusive chamber vacuum relief system allows convenient and fast re-entry to cabinet upon outer door closings.
Two 1 inch diameter sensor access port, located in back wall of cabinet for use with sensor probes.
Heavy duty swivel locking casters and two front adjustable leveling feet allow for easy mobility of freezer and stability upon final placement of freezer. Low profile of external cabinet height.

4.2 Controls

Key pad, multifunction, menu driven, LCD display for trouble free access on monitoring of all control features.
Temperature adjustable in 0.1C increments.
Temperature display to 0.1C increments.
Control probe located in rear lower wall corner for optimal and accurate temperature measurement and control.
Power on/off switch located in protected area on right back of cabinet. Power failure alarm (audible and visual).
Door ajar indicator (audible and visual).
Remote alarm contacts located on right back of cabinet for easy installation and access.
Compressor protection monitors compressor performance and automatically adjusts to internal and external conditions.
Delayed startup (programmable) delays freezer restart after power failure.
Surge protection minimizes voltages spikes; protects system electronics.
Exclusive (patent pending) voltage boost/buck system ensures proper operating voltage to operating system. Reduces incoming line voltage if too high and boosts line voltage if too low.
Advanced PLC microprocessor controller (door mounted at eye level) includes real time clock, event logging, alarm history, advanced alarms, alarm-test, and memory functions.
Audible and visual warm and cold temperature alarms are user settable via controller keypad.
On-board diagnostics continuously monitors system sensors to ensure optimal freezer performance.
Ambient temperature monitor and alarm indicate room temperature conditions.
Password protection security for power, temperature and alarm settings.
24-hour back-up microprocessor battery continuously recharged.

4.3 Refrigeration System

The refrigeration system is powered by an advanced low noise high performance cascade refrigeration system using two next generation 1 HP hermetically-sealed compressors.

Patent pending multiple capillary tube system delivers refrigerant on demand matched with advanced flat plate heat exchanger design providing optimal heat removal and superior cold temperature performance with faster recovery times.

Down feed heavy gauge copper evaporator design enhances refrigerant flow increasing the overall efficiency, and temperature uniformity and recovery performance.

Air cooled condenser, high capacity with large surface area. Washable condenser filter maintains optimal efficiency and performance. Clean filter indicator advises to remove and clean. Easy to service and maintain.

Only CFC-Free, commercially available refrigerants are used: R404a in first stage; R508b in second stage.

4.4 Voltages (Model Suffix /)

/0: 115V, 60 Hz, 1Ø (Amps- 16) 5-20P Plug
/4: 208/230V, 60Hz 1Ø (Amps- 12) 6-15P Plug
/5: 230V, 50 Hz, 1Ø (Amps- 12) Power inlet module

All models are built to UL and CUL standards for safety and performance.

4.5 Cabinet Dimensions

Model	Capacity	Interior W x F-B x H	Exterior ** W x F-B x H	Weight
UCUF141	14.3 cuft 405 liters	19.4” x 24.3”x 53” 49 cm x 61 cm x 134 cm	30.8” x 36.1” x 77.8” 92 cm x 91 cm x 197 cm	645 lbs 297kg
UCUF191	18.9 cu.ft. 539 liters	25.2” x 24.3” x 53” 64 cm x 61 cm x 134 cm	36.5” x 36.1” x 77.8” 78 cm x 91 cm x 197 cm	655 lbs 297kg
UCUF241	23.2 cu.ft. 659 liters	31.1” x 24.3” x 53” 78 cm x 61 cm x 134 cm	42.3” x 36.1” x 77.8” 107 cm x 91 cm x 197 cm	660 lbs 297kg
UCUF281	27.5 cu.ft. 781 liters	36.8” x 24.3” x 53” 93 cm x 61 cm x 134 cm	48.1” x 36.1” x 77.8” 122 cm x 91 cm x 197 cm	745 lbs 338 kg

**Exterior dimensions include allowances for hinges, door handle and control panel

4.6 Inventory Rack Capacities

Model	2 in. Sliding	Box capacity per rack/cabinet	3 in. Sliding	Box Capacity per rack/cabinet
UCUF141	**NSR244**	**16/240**	**NSR334**	**12/180**
UCUF191	**NSR244**	**16/320**	**NSR334**	**12/240**
UCUF241	**NSR244**	**16/400**	**NSR334**	**12/300**
UCUF281	**NSR244**	**16/480**	**NSR334**	**12/360**

4.7 Rack Dimensions:

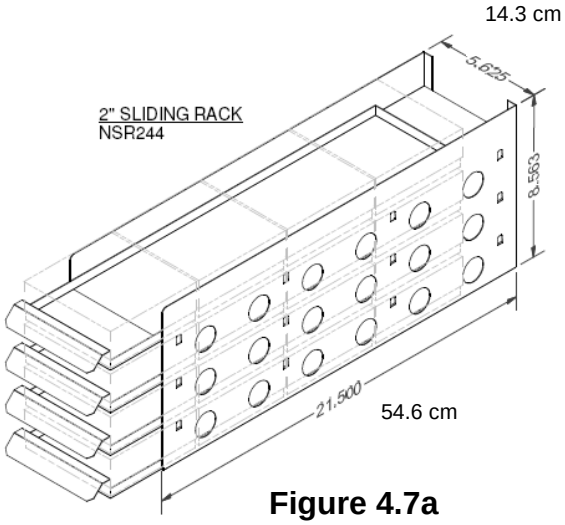

Figure 4.7a

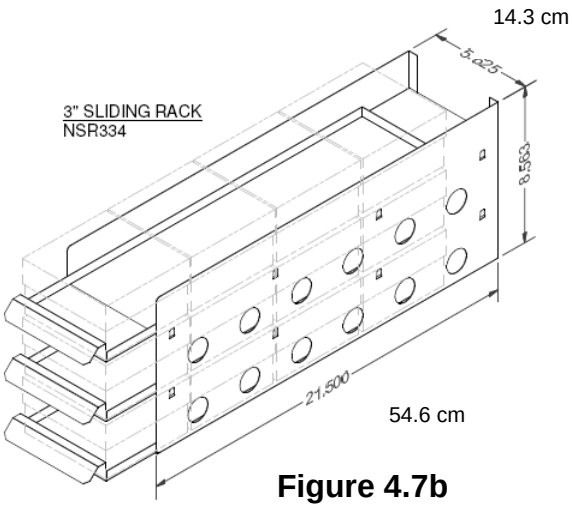

Figure 4.7b

4.8 SPECIFICATION DRAWING - UCUF141 series

Door can be opened 180° to allow passage through narrow halls and doorways.

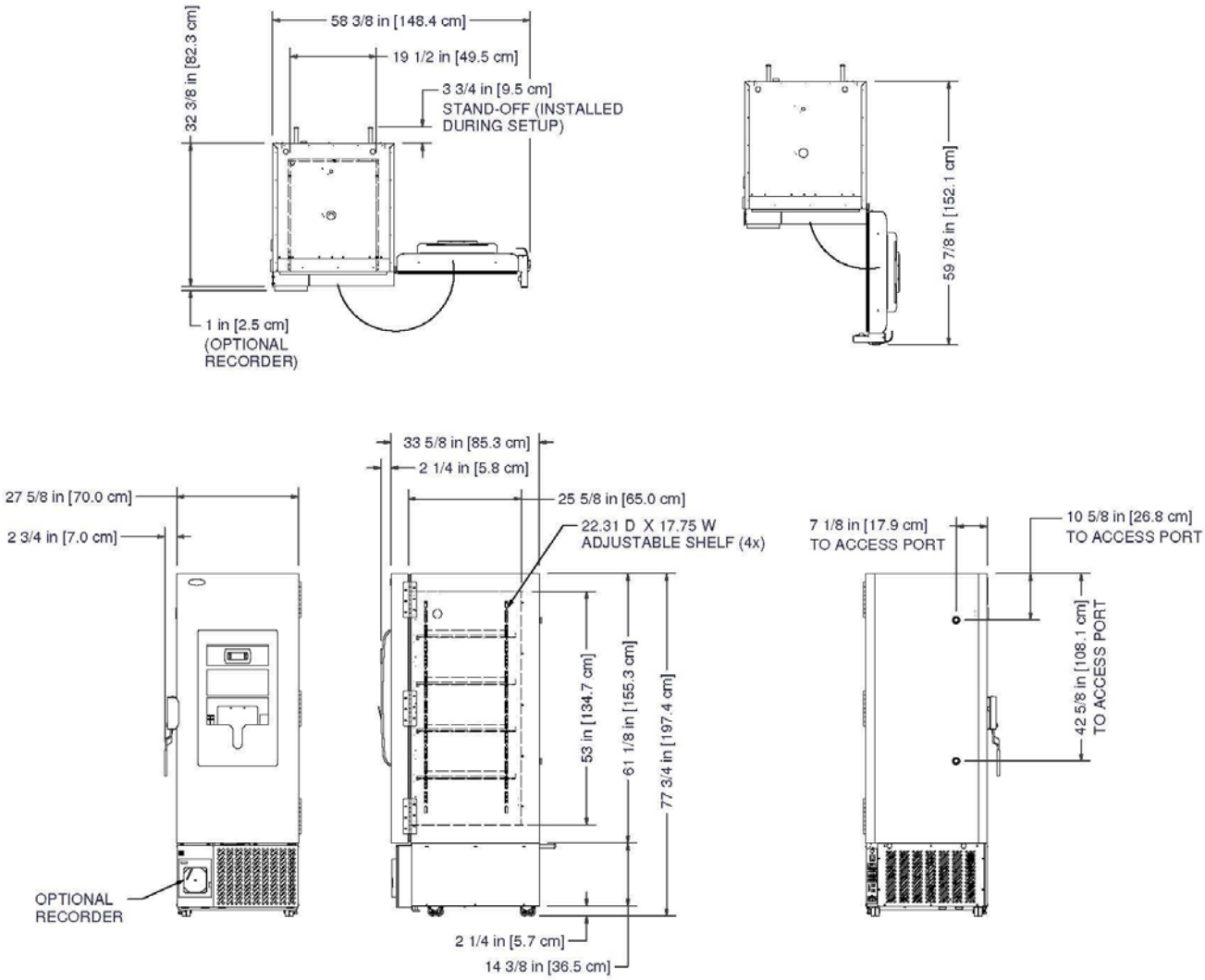

SPECIFICATION DRAWING - UCUF191 series

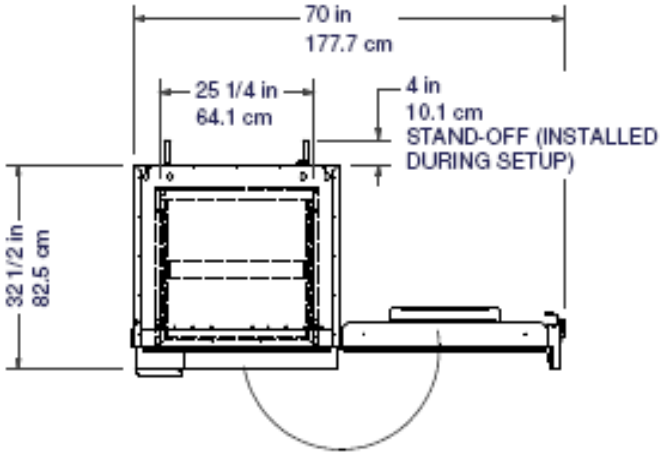

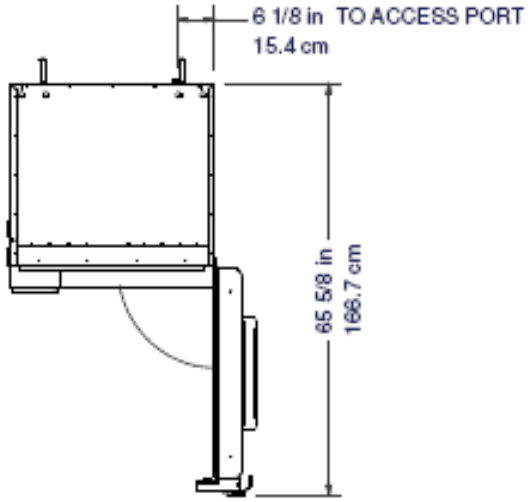

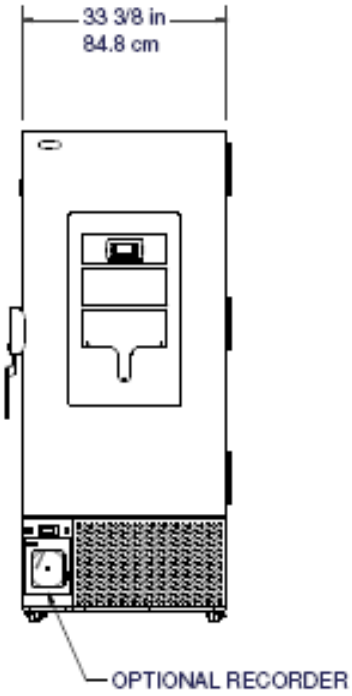

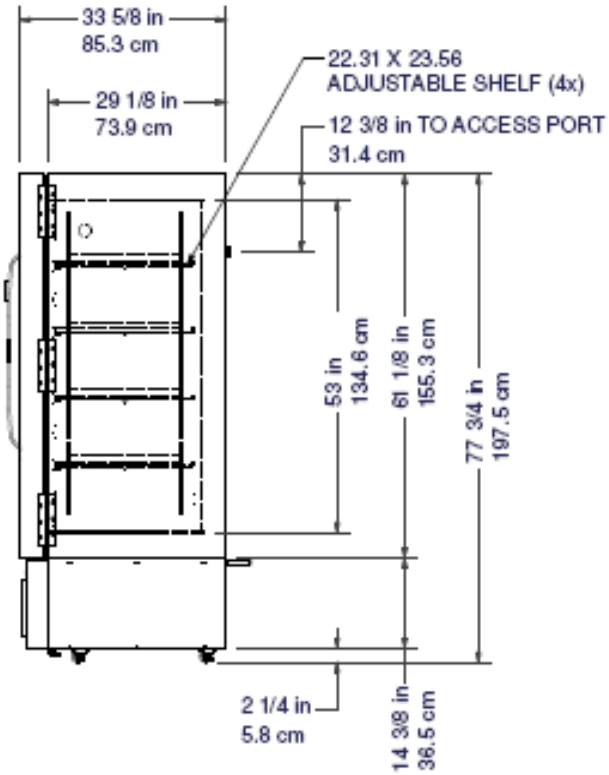

SPECIFICATION DRAWING - UCUF241 series

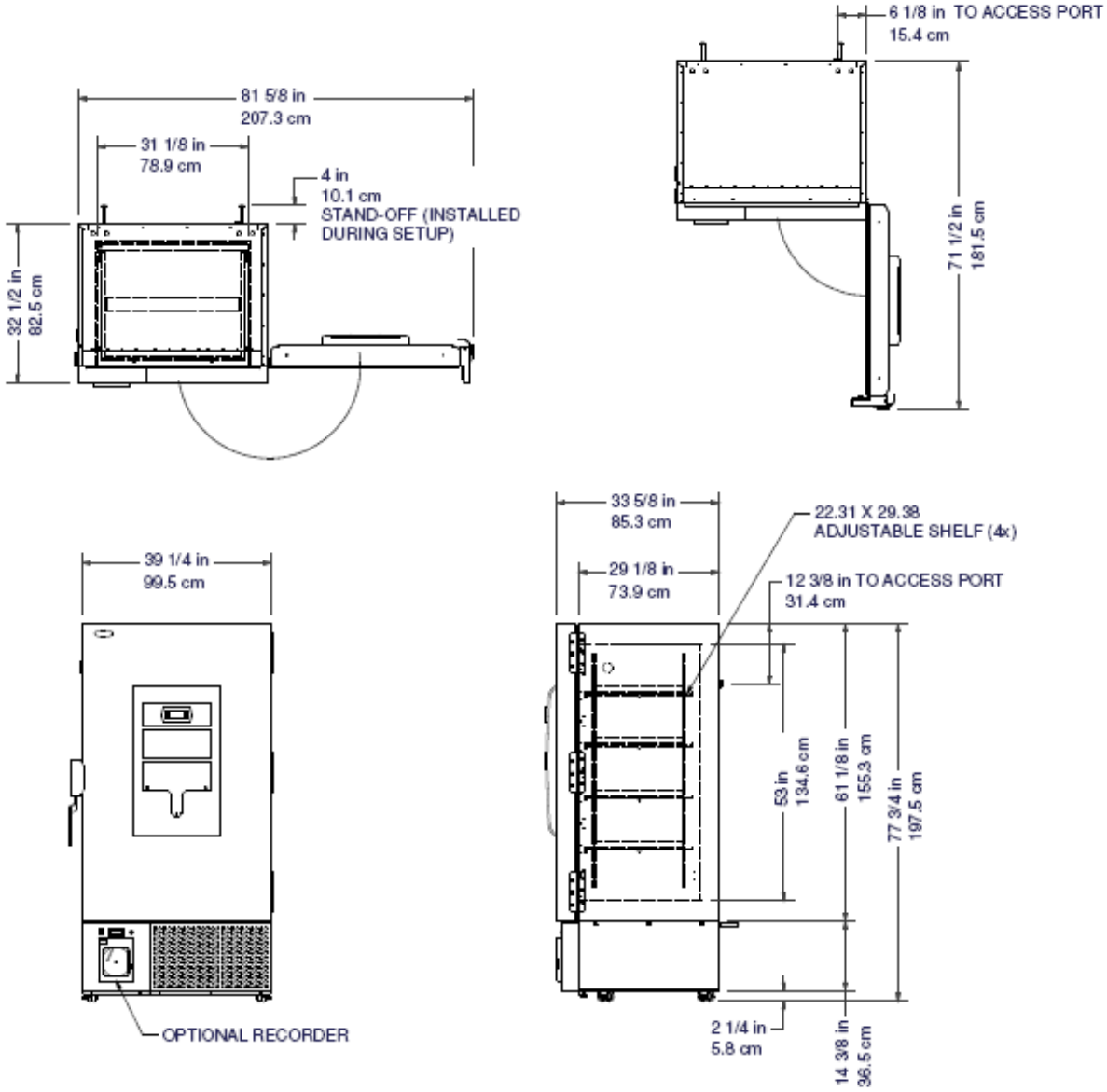

SPECIFICATION DRAWING - UCUF281 series

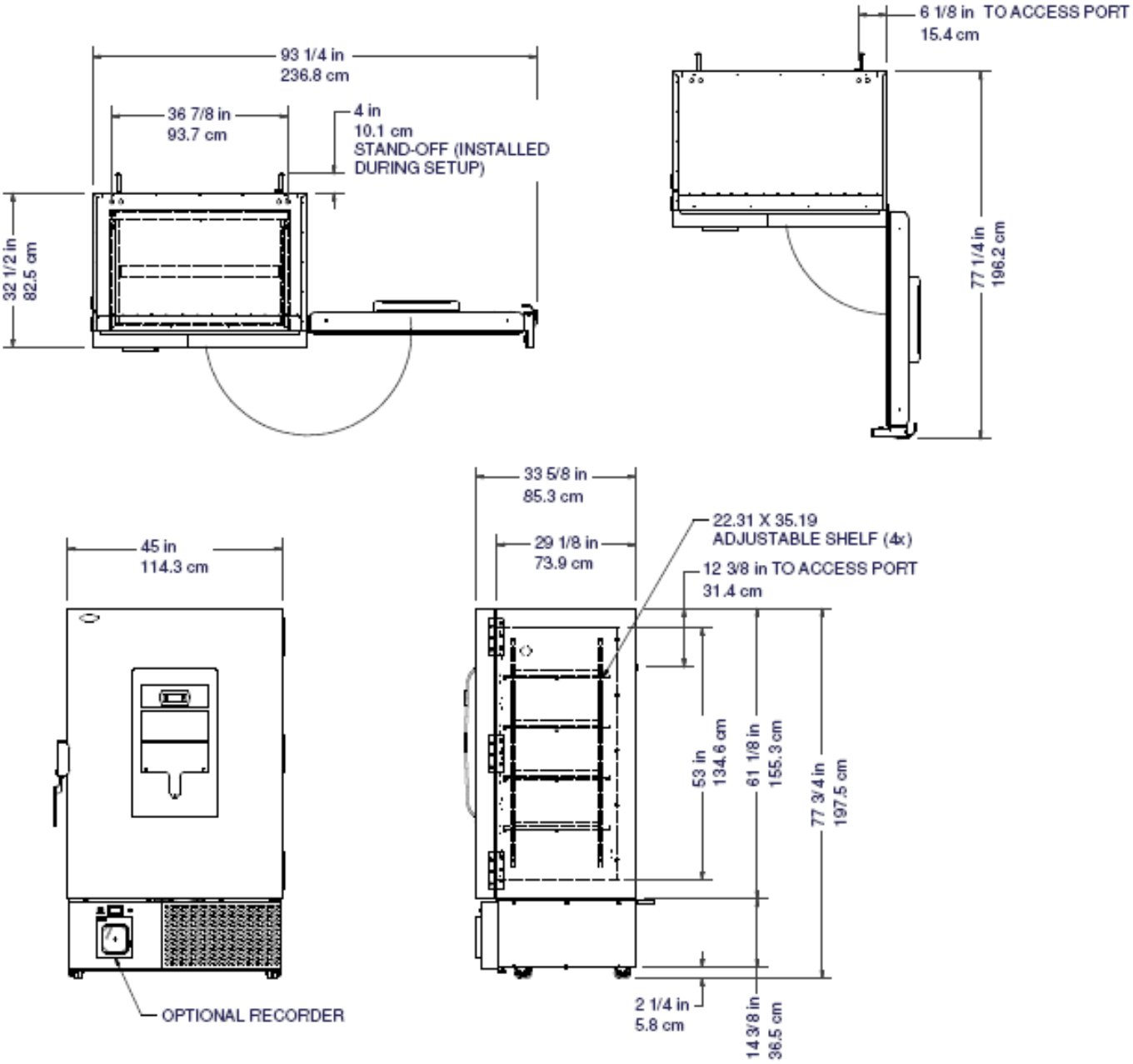

5. FACTORY INSTALLED OPTIONS

5.1 LN2/CO2 backup System

Note: When purchasing CO2 cylinders make sure they are equipped with siphon tubes for drawing liquid from the bottom of the cylinder. CO2 cylinders must be stored and used at room temperature to function properly. LN2 tanks will function at any reasonable temperature.
Take safety precautions by securing the cylinders with chains to a stationary object such as a main support beam before attached the supply hose.

All backup systems are factory installed. The flow of liquid LN2 or CO2 will discontinue with door openings. The DC Solenoid may need to be removed to get through standard door opening.

Upon receiving and uncrating the cabinet, remove the batteries/mounting bracket from inside the cabinet. Loosen (3) screws on back of the cabinet and install battery assembly and tighten screws. Attach wire connections as shown in Figure 5.1a.

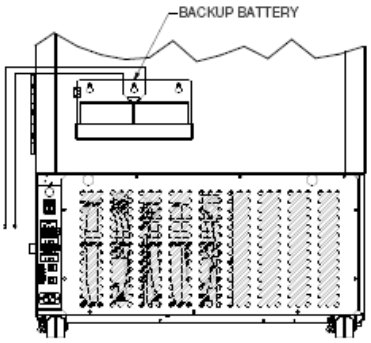

Figure 5.1a Backup system battery mounting and wire connections

Install hose/fittings as needed to solenoid inlet as illustrated in Figure 5.1 below.

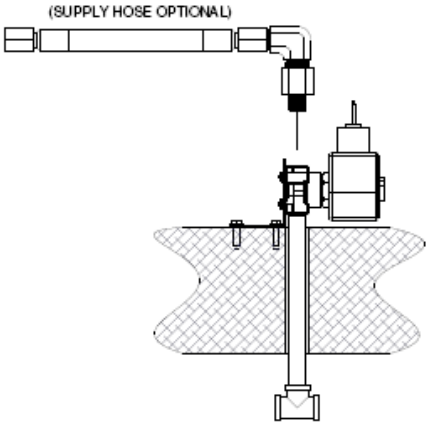

Figure 5.1b Backup system hookup.
The recommended temperature set points for LN2 should not exceed -80°c and the CO2 set point should not exceed -70°c. The user display will remain lit during power outage to display the cabinet temperature but the intensity will be reduced to preserve battery life.
When the LN2/CO2 system is in operation the batteries should maintain cabinet temperature for approximately 48 hours.

Occasionally the positive pressure relief port on top of the cabinet may need to be cleaned of ice and snow. Use a soft cloth to wipe any frost. The port is shown in Figure 5.1c.

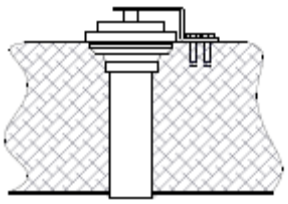

Figure 5.1c Positive pressure relief port.

5.2 Chart Recorder

Once the cabinet has been connected to the main AC power supply, connect the battery to the battery strap and place the battery in its holder as illustrated below. The green LED light will glow a constant green color indicating both the battery and the main power to the unit are good. If the power were to fail or the battery is weak, the green LED will start flashing indicating there is a power failure or it is time to replace the battery. The 9 volt DC battery will allow the recorder to continue to function for approximately 24 hours in the event of a power failure.

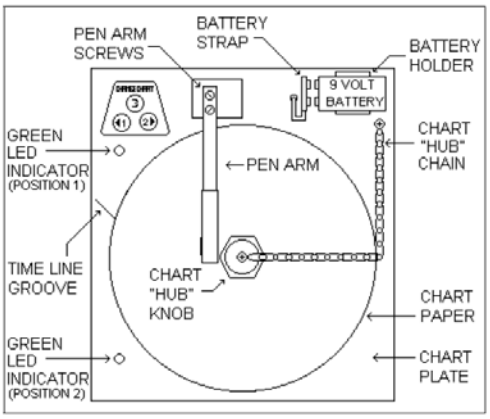

Figure 5.2 Chart recorder

Changing the Chart Paper

Press and hold button #3 for approximately 1 second until the pen moves to the left of the chart and then release the button. Wait until the pen has completely moved off the chart.
Unscrew the chart “hub” at the center of the chart. Remove the old chart and position the new one so the correct time lines coincides with the time line groove on the chart plate.

Thread on the chart “hub” by hand until secure. Press and hold #3 again for approximately 1 second until the pen is marking on the paper. If it does not leave a mark you may have to adjust it to establish contact with the paper.

Calibrating the Pen Arm

To adjust the recording pen calibration to the outer most temperature graduation of the chart, press and hold #3 until the pen moves off the chart. Press and hold #3 again until the pen begins to move back onto the chart. The pen will briefly stop at the outer most temperature graduation of the chart before continuing onto the chart to begin recording. If the pen does not stop at this location it can be adjusted by using #1 and #2 arrow buttons. When the pen moves back onto the paper and briefly stops, you will have approximately 5 seconds to adjust the pen by using the left and right arrows, or #1 and #2 buttons.

Note: Each time the chart paper is changed, make sure the pen stops at the outer most temperature graduation or you will record an incorrect temperature on the chart paper.

6. PROGRAMMABLE CONTROLLER

6.1 KEY FUNCTIONS

ALARM KEY: Displays active alarms, alarm history, acknowledge alarms, and clear alarms. Back lit when an alarm is active.

PROGRAM KEY: Allows access to set points and main control parameters.

ESCAPE KEY: Returns to the main menu (SYSTEM STATUS).

DOWN KEY: Decreases parameter values, and scrolls through screens.

UP KEY: Increases parameter values, and scrolls through screens.

ENTER KEY: Moves the cursor between parameter fields and confirms the set data.

6.2 STARTING UP AND OPERATING THE CONTROLLER

KEY: *ESCAPE*

Pressing the ESC key will display the following screen. The SYSTEM STATUS screens are display only. To change set points the values must be entered at the corresponding screens. To view the other SYSTEM STATUS screen press the UP or Down Arrow keys.

System Status #1

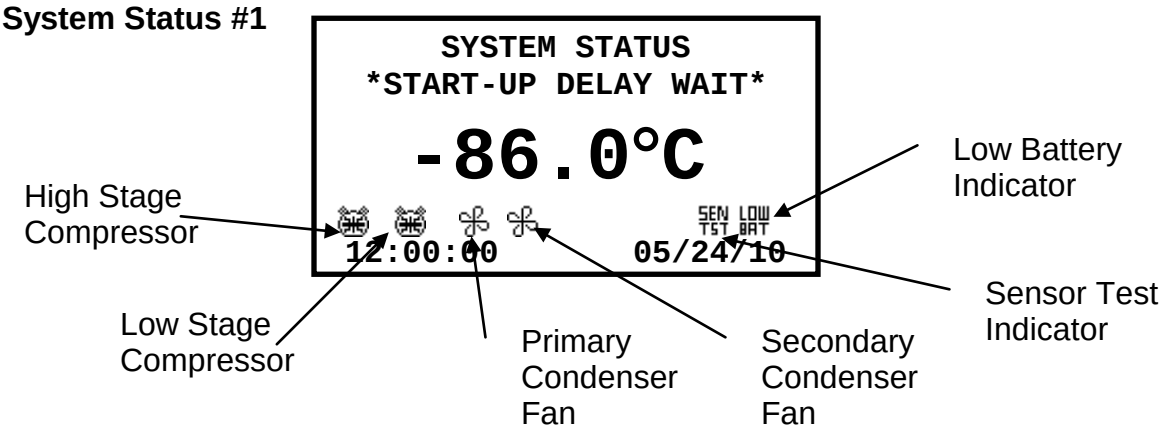

The SYSTEM STATUS screen details the current cabinet temperature, the high and low stage compressor, fan status, low controller back up battery indicator, sensor test indicator and the current date and time.

Steady: COMPRESSOR ON

Alternating clock/compressor: COMPRESSOR DELAY

Steady: FAN ON

System Status #2

```
     SYSTEM STATUS 2
 HEAT EXCHANGER:-25°C
    AMBIENT AIR: 25°C

 HIGH STAGE COMP:ON
  LOW STAGE COMP:OFF
 PRIMARY COND FAN:ON
SECONDARY COND FAN:ON
```

HEAT EXCHANGER: Temperature of the heat exchanger between the high stage and the low stage.
AMBIENT AIR: Temperature of the ambient air surrounding the cabinet.
HIGH STAGE COMP: Status of the high stage compressor. (ON, OFF, DELAY)
LOW STAGE COMP: Status of the low stage compressor. (ON, OFF, DELAY)
PRIMARY COND FAN: Status of the primary condenser fan.
SECONDARY COND FAN: Status of the primary condenser fan.

System Status #3

```
SYSTEM STATUS 3
INPUT VOLTAGE:
   228 volts

OUTPUT VOLTAGE:
   228 volts

     NORMAL
```

INPUT VOLTAGE: Line voltage to the cabinet.

OUTPUT VOLTAGE: Voltage output from the voltage stabilizer to the cabinet components.

NORMAL/BOOSTING/BUCKING: The last line displays the status of the Buck-Boost system.

System Status #4

```
BATTERY SETUP
   25 volts
BATTERY ON/OFF> ON
```

The second line of this display details the voltage of the controller/display backup battery.

BATTERY ON/OFF: ON means the controller/display battery back up system is enabled. OFF means it is disabled.

KEY: PROGRAM

Pressing the PRG key will display the following screen.

6.3 SET-UP MENU

```
   SETUP MENU
SET POINTS     >
 PARAMETERS    >
MAINTENANCE    >
SENSOR TEST    >
```

This screen allows access to the listed set up screens. Press the ENT key to move the cursor to the desired field and press the Up or Down Arrow key to scroll through the screens of each group.

6.4 SET POINTS

SET POINTS: Screen 1

```
TEMPERATURE
SET POINT
-80.0°C
```

Factory Default Setting: -80.0°C

Press the ENT key to move the cursor to the set point data field. Use the Up or Down Arrow key to increase or decrease the number. When the correct set point is displayed press the ENT key to enter the set point, the cursor will move to the upper left hand corner. Press the Up or Down Arrow key to scroll through the other screens or press the ESC key to return to the System Status screen.

SET POINTS: Screen 2

```
AIR TEMP ALARM
HIGH ALARM>-70.0°C
LOW ALARM>-90.0°C
ALARM DELAY>120sec
```

Press the ENT key to move the cursor to the set point data field. Use the Up or Down Arrow key to increase or decrease the number. When the correct set point is displayed press the ENT key to enter the set point, the cursor will move to the upper left hand corner.

Press the Up or Down Arrow key to scroll through the other screens or press the ESC key to return to the System Status screen.

SET POINTS: Screen 3

```
HEAT EXCHR TEMP ALARM
HIGH ALARM> 20.0°C
LOW ALARM>-45.0°C
ALARM DELAY> 0sec
```

Press the ENT key to move the cursor to the set point data field. Use the Up or Down Arrow key to increase or decrease the number. When the correct set point is displayed press the ENT key to enter the set point, the cursor will move to the upper left hand corner. Press the Up or Down Arrow key to scroll through the other screens or press the ESC key to return to the System Status screen.

SET POINTS: Screen 4

```
  AMBIENT AIR ALARM
 HIGH ALARM> 95.0°C
  LOW ALARM> 50.0°C
ALARM DELAY> 0sec
```

Press the ENT key to move the cursor to the set point data field. Use the Up or Down Arrow key to increase or decrease the number. When the correct set point is displayed press the ENT key to enter the set point, the cursor will move to the upper left hand corner. Press the Up or Down Arrow key to scroll through the other screens or press the ESC key to return to the System Status screen.

SET POINTS: Screen 5

```
SECONDARY CONDENSER
FAN ENABLE TEMPERATURE
      ON: 40.0°C
     OFF: 35.0°C
```

Press the ENT key to move the cursor to the set point data field. Use the Up or Down Arrow key to increase or decrease the number. When the correct set point is displayed press the ENT key to enter the set point, the cursor will move to the upper left hand corner. Press the Up or Down Arrow key to scroll through the other screens or press the ESC key to return to the System Status screen.

SET POINTS: Screen 6

```
   DIRTY FILTER ALARM
 FILTER TIME SET POINT>
        90 DAYS
   RESET FILTER DAYS>
          NO
  CURRENT FILTER DAYS:
        25 DAYS
```

FILTER TIME SET POINT: Number of days before an alarm will occur as a reminder to check/change the condenser filter.

RESET FILTER DAYS: Changing this field to a YES will reset the CURRENT FILTER DAYS to 0.

CURRENT FILTER DAYS: Number of days after the last reset.

SET POINTS: Screen 7

```
BACK-UP SYSTEM SETUP

SET POINT>-75.0ºC

MANUAL CONTROL
AUTO/MANUAL> AUTO
OPEN/CLOSED> CLOSED
```

LN2/CO2 battery back-up system setup and control. If the optional back-up system is installed and the main electrical power is lost, the back-up system will control the LN2/CO2 valve to these settings.

SET POINT: The LN2 valve will maintain this temperature.

AUTO/MANUAL:

AUTO - The LN2 valve is controlled via the VALVE OPEN and VALVE CLOSED parameters.

MANUAL - The LN2 valve is controlled via the OPEN/CLOSED parameter.

6.5 PARAMETERS

Note: If the passwords are used the following screen will be displayed. On initial start up there is no password protection the passwords are set in the PARAMETERS group. If no password protection is used the “ENTER PASSWORD” screen will not be displayed.

```
ENTER PASSWORD
0000

WRONG PASSWORD
```

Press the ENT key to move the cursor to the four-digit password. Use the Up or Down Arrow key to increase or decrease the number. When the correct password is displayed press the ENT key to enter the password. If the correct password was entered the corresponding screen will be displayed. If a wrong password was entered “WRONG PASSWORD” will be displayed on the bottom line. The password can be re-entered or press the ESC key to return to the System Status screen.

PARAMETERS: Screen 1

```
REAL TIME CLOCK
CURRENT TIME/DATE
SET TIME: 00:00
SET DATE: 00/00/00
```

Press the ENT key to move the cursor to the set point data field. Use the Up or Down Arrow key to increase or decrease the number. When the correct value is displayed press the ENT key to enter the parameter, the cursor will move to the next data field. Press enter to move the cursor to the upper left hand corner and the Up or Down Arrow key to scroll to the next set parameter screen or press the ESC key to return to the System Status screen.

PARAMETERS: Screen 2

```
DOOR AJAR ALARM SETUP
ENABLED
DELAY>1 min
```

DOOR AJAR ALARM: Enables or disables the door ajar alarm.

DELAY: The amount of time in minutes that the door must be open before the alarm activates.

PARAMETERS: Screen 3

```
BUZZER SETUP

TONE > CONSTANT
RING BACK > 20 min

STARTUP DELAY> 300sec
```

TONE: CONSTANT, INTER. SLOW, and INTER. FAST - Changes the tone of the alarm buzzer.

RING BACK: Silences the alarm for a period of time after an alarm has been acknowledged.

STARTUP DELAY: Delays the startup of the compressors upon power up.

PARAMETERS: Screen 4

```
PASSWORD PROTECTION

     LEVEL 1>   0
     LEVEL 2>   0
```

LEVEL 1: Password protection for the SET POINT and SENSOR TEST screens.

LEVEL 2: Password protection for the PARAMETERS screens.

PARAMETERS: Screen 5

```
COMMUNICATIONS SETUP
 UNIT IDENT>   1
  BAUD RATE>   19200
  PROTOCOL>MODBUS
```

UNIT IDENT: Sets the unit identification for serial communications.

BAUD RATE: Sets the Baud Rate for the serial communications. Baud rates supported; 1200, 2400, 4800, 9600, & 19200.

PROTOCOL:

SUP RS232 - For use with Remote Supervisor. Requires optional software, software key, and RS232 communications board.

SUP RS485 - For use with Local Supervisor. Requires optional software, software key and RS485 communications board.

MODBUS - For use with custom software. Requires optional RS485 communications board.

PARAMETERS: Screen 6

```
ANALOG OUTPUT SET UP
TEMP. LOW>  -90.0°C
TEMP. HI >  -40.0°C

VOLT LOW>   2.0 VDC
VOLT HI >  10.0 VDC
```

TEMP. LOW: The low end of the scale of re-transmitted temperature.

TEMP. HI: The high end of the scale of re-transmitted temperature.

VOLT LOW: The low end of voltage output.

VOLT HI: The high end of voltage output.

6.6 MAINTENANCE: Screen 1 & 2

```
      CALIBRATION 1
  AIR TEMP CALIBRATION
CALIBRATION>  0.0°C
     ACTUAL:-80.0°C
 HEAT EXCH CALIBRATION
CALIBRATION>  0.0°C
     ACTUAL:-34.0°C
```

```
      CALIBRATION 2
 AMBIENT AIR CALIBRATION
CALIBRATION>  0.0°C
     ACTUAL: 23.0°C
```

These screens enable the calibration of the air heat exchanger and ambient air temperature sensors.

MAINTENANCE: Screen 3

```
BUCK-BOOST SETUP
BOOST ON>207 OFF>212
BUCK ON>235 OFF>230
```

BOOST ON: The buck-boost system will boost the voltage to the compressors if the supply voltage is at or below this voltage continuously for 1 minute.

BOOST OFF: If the unit is in boost mode, it will stop boosting if the supply voltage is above this voltage.

BUCK ON: The buck-boost system will buck the voltage to the compressors if the supply voltage is at of above this voltage continuously for 1 minute.

BUCK OFF: If the unit is in buck mode, it will stop bucking if the supply voltage is below this voltage.

MAINTENANCE: Screen 4

COOLING OFFSET
ON> 1.0ºC =-79.0ºC
OFF>-0.3ºC =-80.3ºC

This screen details the offsets to the cabinet air temperature set point where the compressors will turn on and off.

CABINET AIR ALARM TEST
NO TEST SELECTED

CABINET AIR ALARM TEST:

NO TEST SELECTED - No test is currently active.

CAB AIR LOW TEST - The low cabinet air temperature alarm will be tested.

CAB AIR HIGH TEST - The high cabinet air temperature alarm will be tested.

6.7 QUALITY CONTROL

The following is a recommended procedure for quality control of this cabinet. If other regulations require control in excess of this procedure, the more stringent guidelines should apply.

CALIBRATING DISPLAY TEMPERATURE

If the display temperature needs to be validated, this can be accomplished by utilizing a NBS (National Bureau of Standards) traceable thermometer.

The air temperature can be validated by placing the thermometer through the access port hole at the lower left corner so the thermometer is not in direct contact with any metal surfaces but as close to the cabinet sensor as possible. The displayed Air Temperature should read within ±1°C of the NBS Thermometer. If the displayed Air Temperature is out of range enter an offset in the Air Temperature Calibration screen.

Compare the temperature the NBS with the Chart Recorder temperature. It should agree within ±1°C of the NBS Thermometer. If the Chart Recorder Temperature is out of range refer to the Chart Recorder Manual to make adjustments.

6.8 ALARMS

During normal operation, should an alarm occur, the ALARM key will **glow red** and an **audible buzzer** will sound to indicate the presence of the alarm. Pressing the ALARM key will display the last alarm that occurred. The display will be similar to the following.

```
**ALARM**
HIGH TEMPERATURE
CABINET AIR
08:15    05/10/10
```

At this point, the RING BACK timer has not started. The ESC key must be pressed to start the RING BACK timer. If the ESC key is not pressed, the audible alarm is disabled for this alarm.

Pressing the ALARM key will scroll through all the current alarms after which the following screen will be displayed.

```
NO MORE ALARMS
PRESS ENTER TO CLEAR

ALARM HISTORY. . . .>
```

Pressing the ↵ key will clear all alarms if the condition for the alarm has been resolved. It will also start the RING BACK timer. Pressing the Down Arrow key while in the ALARM HISTORY field will display the alarm history screen similar to the following(pressing the alarm key when there is no alarms will also display this screen).

```
ALARM HISTORY #1
DOOR AJAR
11:01  05/18/10
Air Temp: -86.0ºC
Heat Exchanger Temp:-30.0ºC
Ambient Temp: 23.0ºC
```

The ALARM HISTORY screen will display the last alarm that has occurred. The controller will store the last 100 alarms that have occurred. To view the Alarm History Log, press the ENT button to move the cursor to the alarm #. Using the UP and Down Arrow buttons scroll through the stored alarms.

Each alarm will display the date and time of the alarm along with the cabinet air, heat exchanger and ambient air temperatures when the alarm occurred.

TABLE OF ALARMS:

ALARM DESCRIPTION	NOTES
LOW TEMPERATURE CABINET AIR	
HIGH TEMPERAURE CABINET AIR	
CABINET AIR TEMPERATURE SENSOR FAILURE	
LOW TEMPERATURE HEAT EXCHANGER	
HIGH TEMPERATURE HEAT EXCHANGER	
HEAT EXCHANGER TEMPERATURE SENSOR FAILURE	High and low stage compressors will run continuously during this alarm.
LOW TEMPERATURE AMBIENT AIR	
HIGH TEMPERATURE AMBIENT AIR	
HIGH STAGE FAILURE	Upon start up, the high stage ran for 30 minutes without the heat exchanger temperature reaching -18.0ºC.
DOOR AJAR	
POWER RESET	Alarm occurs upon applying power.
CONDENSER FILTER CHANGE FILTER	Indicates a change of condenser filter may be needed. This alarm is based on time only.
LOSS OF LINE VOLTAGE	Line voltage to the cabinet was lost.
HIGH STAGE COMPRESSOR DID NOT START	Occurs if current is not detected within the high stage compressor circuit within 5 seconds after being enabled.
HIGH STAGE COMPRESSOR FAILURE	Occurs if current is lost within the high stage compressor circuit when enabled.
LOW STAGE COMPRESSOR DID NOT START	Occurs if current is not detected within the low stage compressor circuit within 5 seconds after being enabled.
LOW STAGE COMPRESSOR FAILURE	Occurs if current is lost within the low stage compressor circuit when enabled.
HIGH STAGE ONLY	Occurs if the high stage runs continuously for 30 minutes with the low stage running.

6.9 TECHNICAL SPECIFICATIONS

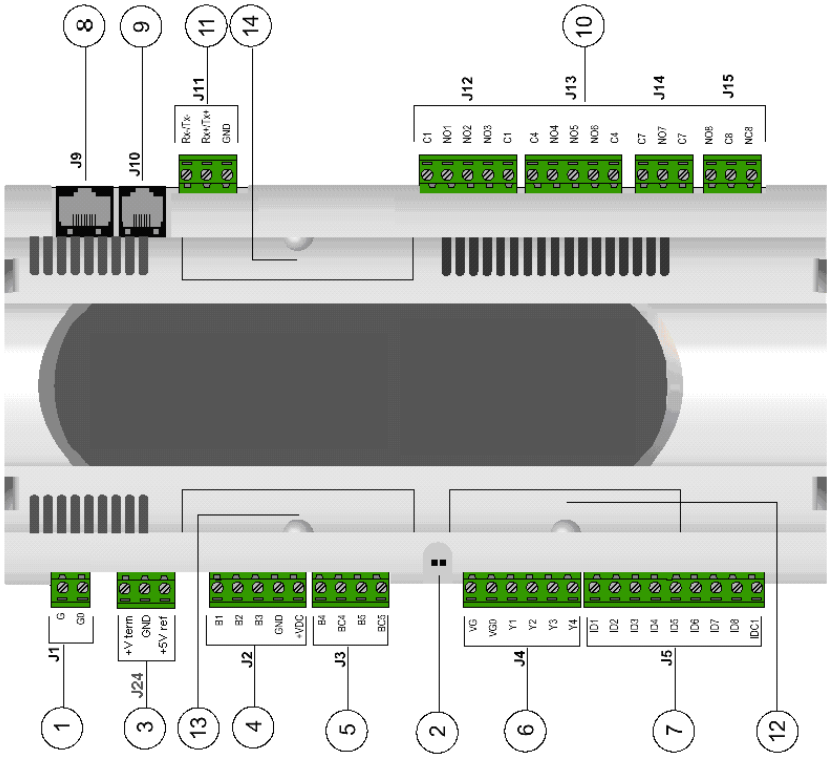

Figure 6.9

Legend

1. Power supply connector [G (+), G0 (-)]
2. Yellow LED indicating mains power and red LED for alarms
3. 5VDC regulated power supply
4. Universal analog inputs NTC, 0/1V, 0/10V, 0/20mA, 4/20mA
5. Passive analog inputs NTC, PT1000, ON/OFF
6. Analog outputs 0/10V
7. 24Vac/Vdc digital inputs
8. Connector for synoptic terminal (external panel with direct signaling)
9. Connector for all pCO 3 series standard terminals and for the application program downloads
10. Relay digital outputs
11. Connector, addressing and LED for pLAN local network
12. Hatch for inserting RS485 serial card for supervisor or RS232 serial card for modem interfacing
13. Hatch for inserting the card for connection to a parallel printer
14. Hatch for inserting the FLASH-MEMORY expansion card

Mechanical Specifications

Dimensions SMALL board models can be mounted on 13 DIN modules, 110x227.5x60mm
MEDIUM and LARGE board models can be mounted on 18 DIN modules, 110x315x60mm
Mounting on DIN rail
Terminal block with removable-screw male/female connectors or removable pitch header connectors according to the customer requirements – max. voltage: 250Vac - cable cross-section: min. 0.5mm^2 – max.2.5mm^2

Plastic Case

- It can be fastened on DIN rail according to DIN 43880 and CEI EN 50022 standards
- Material: technopolymer
- Self-extinguishing: V0 (complying with UL94) and 960°C (complying with IEC 695)
- Ball pressure test: 125°C
- Comparative tracking index: 250V
- Color: RAL7035 gray or anthracite gray
- cooling vent-holes

Electrical Specifications

Power (controller with terminal connected)	22÷40Vdc and 24Vac ±15% 50/60Hz - P= 20W maximum absorption
CPU	H83002, 16 bit and 16MHz
Program memory (on FLASH MEMORY)	1 Megabyte organized in 16 bit (it can be expanded up to 6 Megabyte)
Data memory (static RAM)	256 kbyte organized in 16 bit (it can be expanded up to 1 Megabyte)
Parameter data memory	2 kbyte organized in 16 bit (maximum limit: 400.000 writes per memory location)
Operating cycle (with application of average complexity)	0.5s (typical value)

Analog Inputs

Analog conversion	10 bit A/D converter, built-in CPU
Type	**passiv**e: NTC temp. Probe, (-50÷100°C; R/T 10k½ ± 1% at 25°C - B 25/80 =3,435°K±1%; step measurement), PT1000 (-100÷200°C; R/T 1000½/°C; step measurement) or free digital input, selected via software (B4, B5 inputs) **universa**l: NTC temp. Probe (see passive type), voltage: 0÷1Vdc or 0÷10Vdc>; current: 0÷20mA or 4÷20mA, selected via software (B1, B2, B3 inputs)
Time constant for each input	0.5s

WARNING: for powering any active probe it is possible to use the 21Vdc at +Vdc terminal; the max. Current that can be delivered is 200mA thermally protected against short circuits.

Digital Inputs

Type	24Vac optically insulated

Analog Outputs

Type	0÷10Vdc optically insulated
Power external	24Vac/Vdc
Resolution	8 bit
Max. load	1k½ (10mA)

Digital Outputs

Type	relay

They are grouped in 3 with two common pole terminals in order to assemble the common poles easily. Be careful to the current flowing in common terminals, because it must not exceed the rated current of each single terminal, that is: 8A resistive for removable-screw terminals and 6A resistive for removable pitch header terminals. The relays are divided into groups, according to the insulating distance. Inside each group the relays have their own insulation, so they must be exposed to the same voltage (in general 24Vac or 230Vac). Among the groups there is double-insulation; therefore the groups can be of different voltage. Anyway the double-insulation does exist toward the rest of the controller and its presence is guaranteed among digital output terminals.

Groups	1, 2, 3, 4, 5, 6, 7 - 8 (alarm relay)
NO contacts	all with 250Vac varistor protection
Switch contacts	5 with 250Vac varistor protection on both contacts
Commutable power	2500VA, 250Vac, 8A resistive, 2A FLA, 12A LRA according to UL873 2A resistive, 2A inductive, cosj=0, 4, 2(2) according to EN 60730-1

Other Specifications

Storage conditions	-20T70, 90%r.H. non-condensing
Operating conditions	-10T60, 90%r.H. non-condensing
Index of protection	IP20, IP40 (front panel only)
Environmental pollution	normal
Classification according to	
Protection against electric shock	should be integrated into Class 1 and/or 2 devices
PTI of insulating materials	250V
Period of electric stress across insulating parts	long
Type of actions	1C
Type of disconnection or micro interruption	micro interruption
Category of resistance to heat and fire	D (UL94 - V0)
Immunity against voltage surges	category 1
No. of automatic operating cycles (e.g.: relay)	100,000
Software Class and structure	Class A
Device is not intended to be and hand-held	

According to the limits quoted on the Safety Standards relevant to electromagnetic compatibility (see conformity declaration published on the installation manual), rare malfunctioning is founded only on display and LED indications. LEDs and display are restored when the disturb ends.

The pGD graphic display is an electronic device that is compatible with the previous PCOI/PCOT line terminals; it allows complete management of graphics by the display of icons (defined at an application software development level), as well as the management of international fonts, in two sizes: 5x7 and 11x15 pixels. The application software resides on the pCO board, and therefore the terminal does not require any additional software for operation. Furthermore, the terminals feature a wide operating temperature range (-20T60 °C)

Configuring a New Display

Hold the UP, DOWN and ENTER keys for five seconds. A screen will appear to configure the display address. Press the ENTER key and edit the display address to 00.

Cycle power to the controller and on power up hold the UP and ALARM keys until a screen appears to configure the “pco address”. Press the UP/DOWN buttons to change the pco address to 1 and press the ENTER key.

Hold the UP, DOWN and ENTER keys for five seconds and a screen will appear to configure the display address. Press the ENTER key and then use the UP/DOWN keys to edit the display address to read 32. Then press the ENTER key.

Below the address setting there will be an I/O board selection. Press ENTER until the cursor is at this selection. Use the UP/DOWN keys until a 1 appears in this field. Press ENTER.

A terminal configuration screen will appear asking you to press ENTER. Press ENTER.

A screen will appear with a field named TRM1. Press ENTER until the cursor is within this field. Then change the value to read 32. Then press ENTER until the cursor is at the YES/NO field. Using the UP/DOWN keys, change the value to YES and press ENTER.

This concludes the configuring a new display.

Fault Signals
If the terminal detects the off-line status of the pCO board it is associated with, the display shows the message: I/O Board xx fault.

On the other hand, if the terminal receives no signal from the network, the display shows the following message: NO LINK.

Contrast Adjustment
Use + Prg + ↓↑ buttons to adjust the contrast.

7. REPLACEMENT PARTS

Note: Part Numbers are reference only and may be updated. Consult factory for actual part number (must have model and serial number).

BILL OF MATERIALS			
ITEM	QTY	PART NUMBER	DESCRIPTION
1	1	001200	FILTER DRIER 3 CU IN 1/4 SOLD
2	1	144535	SENSOR,DIXELL CONTROL 5 FT LG

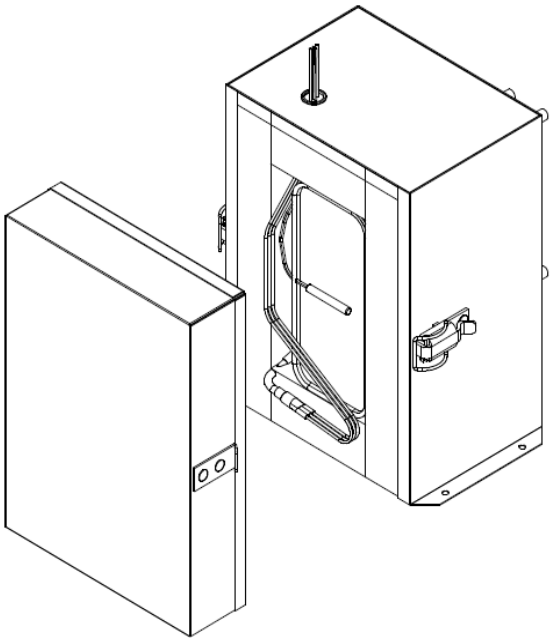

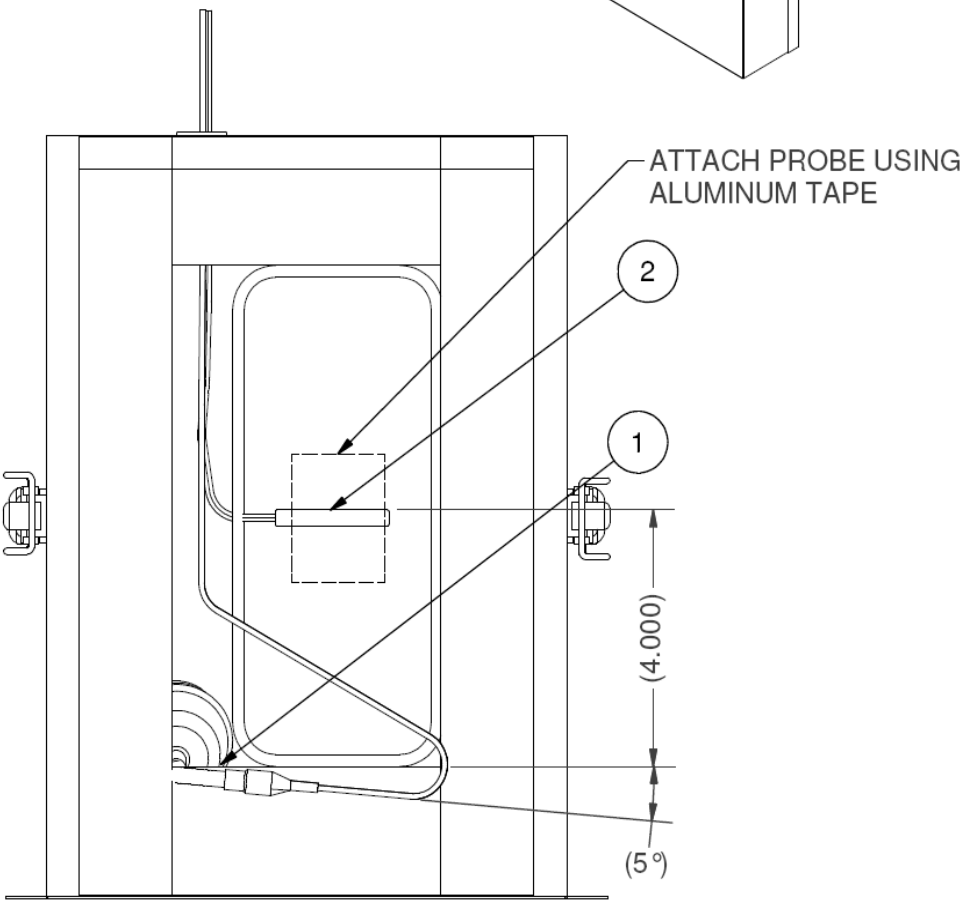

PART NUMBER: 144535
REVISION: A
DESCRIPTION: HEAT EXCH ASSY INSTR.

BILL OF MATERIALS			
ITEM	QTY	PART NO	DESCRIPTION (144438)
1	1	144372	GASKET DOOR ULT 191
2	1	141207	HANDLE ASSY ULT
3	1	141208	DOOR STRIKE ULT MILLED
4	5	001341	SCREW PH 10-24X1/2 SS PH 23
5	3	144247	DOOR HINGE PIANO ULT
6	23	001457	SCREW MS PH 8-32X3/4 SS PH F
7	1	139217	SWITCH #2220-1191-102 NO REED
8	1	145676	CONTROL PCO DISPLAY PGD1
9	1	147398	DOOR CONSOLE ULTS
10	1	147530	DRY ERASE BOARD, ULT'S
11	1	147582	LABEL DOOR CONSOLE-ULT
12	2	145674	CONNECTOR 6 WIRE PHONE RJ12
13	10 FT	145673	WIRE TELEPHONE 6 CONDUCTOR

MODEL				
ITEM	NSSUF 281	NSSUF 241	NSSUF 191	NSSUF 151
1	140960	144279	144372	153990

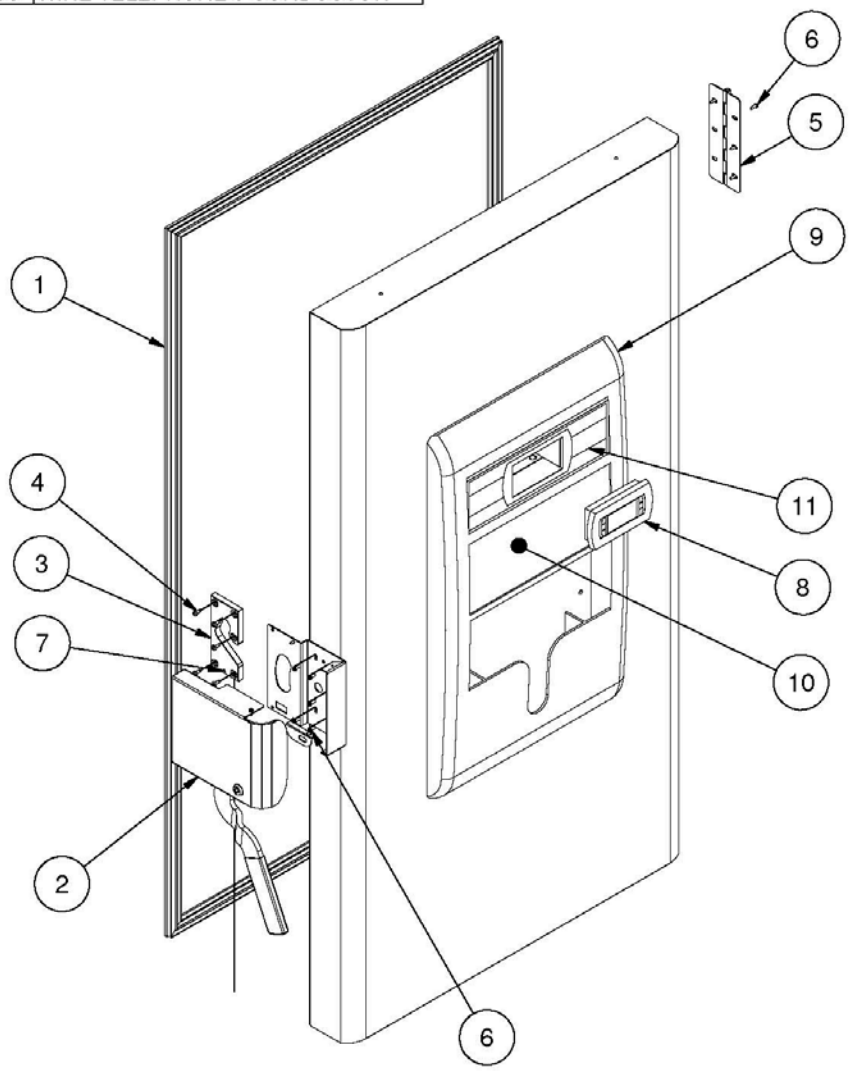

PART NUMBER: 144438
REVISION: C
DESCRIPTION: RH DOOR ASSY ULT191

BILL OF MATERIALS			
ITEM	QTY	PART NO	DESCRIPTION
1	1	141209	HANDLE WELDMENT
2	1	141203	LATCH INTERIOR PLATE, ULT
3	1	147506	HANDLE, ULT PAINTED
4	2	143039	NYLON FLAT WASHER 1/2" ID
5	1	143040	NYLON SLEEVE BEARING
6	1	144769	SCREW HEX SOCKET HD CAP 1/2-20
7	1	144233	DOOR ROLLER, 1" S/S
8	1	144768	NYLON SLEEVE BEARING
9	1	147583	HANDLE CUSHION ULT
10	1	144771	NUT 1/2-20 UNF JAM HEX
11	1	143038	LOCK CYLINDER ULT
13	7	001352	SCREW MS PH 8-32X3/8 ZN TH-C
14	1	147504	HANDLE GRIP CAP PLASTIC ULT
15	1	139218	MAGNET REED SWITCH #4923
18	1	149807	LOCK PLATE PADLOCK ULT's

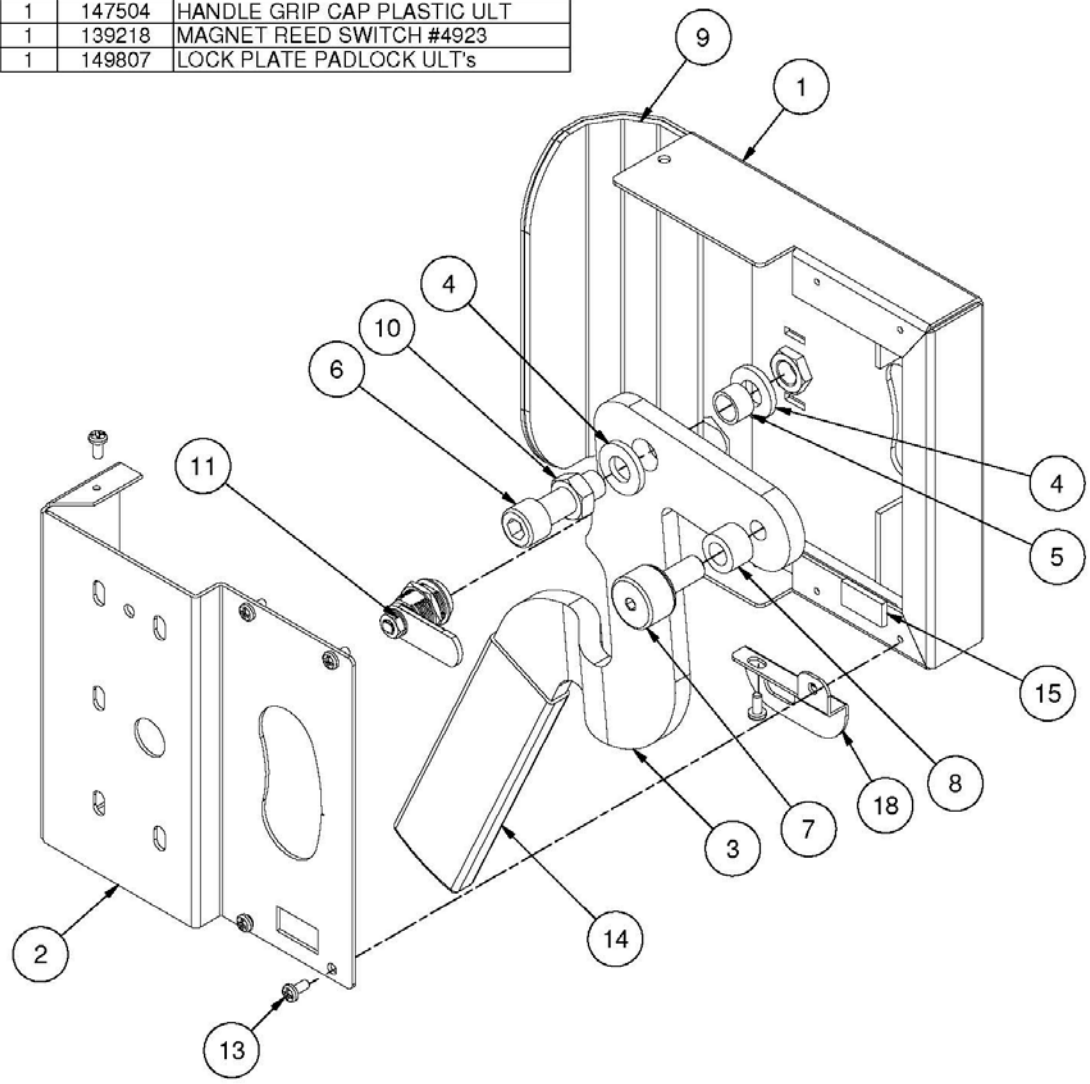

PART NUMBER: 141207
REVISION: C
DESCRIPTION: HANDLE ASSY ULT

BILL OF MATERIALS			
ITEM	QTY	PART NO	DESCRIPTION (144440)
1	5	144471	INNER DR ASSY ULT 191
2	5	144234	HINGE INNER DOOR ULT
3	5	144198	MAGNETIC CATCH, ULT
4	25	001352	SCREW MS PH 8-32X3/8 ZN TH-C
5	5	140973	INNER DOOR LATCH PLATE

MODEL				
ITEM	NSSUF 281	NSSUF 241	NSSUF 191	NSSUF 151
1	144444	144448	144471	155425

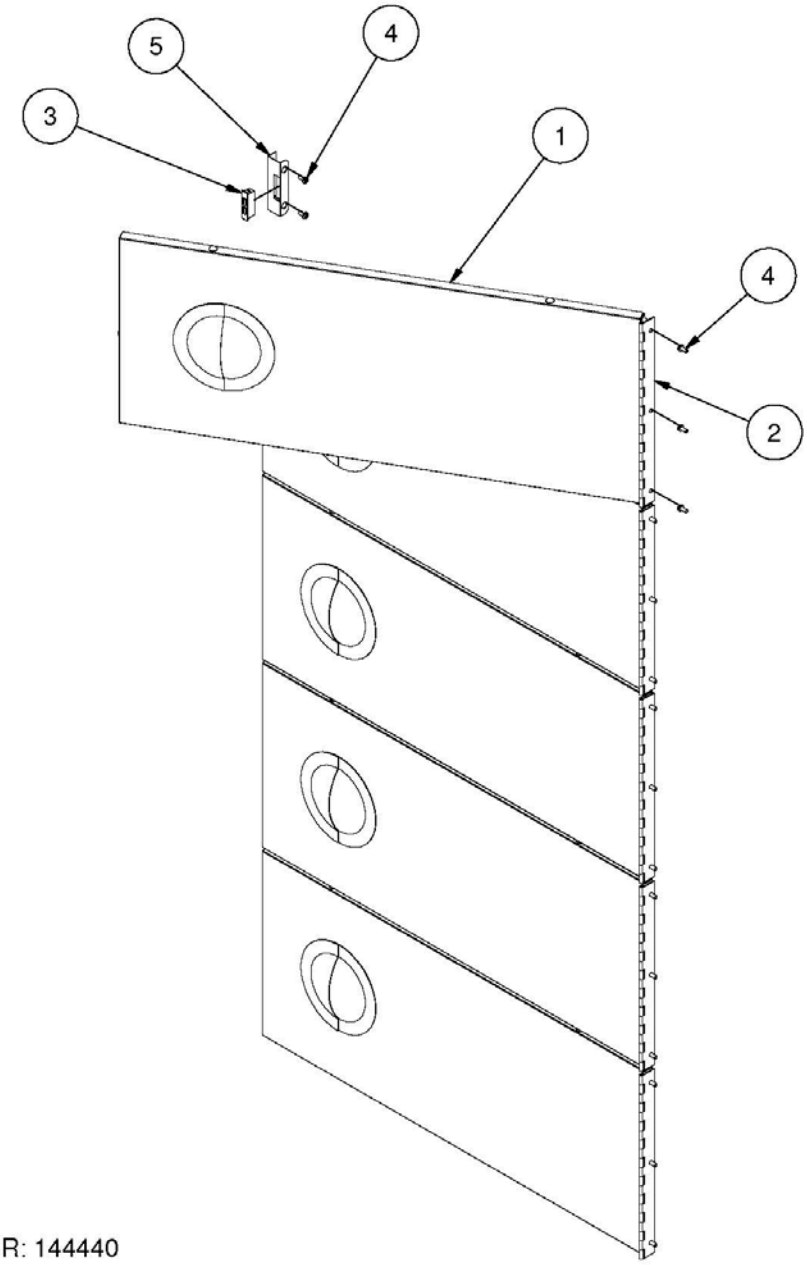

PART NUMBER: 144440
REVISION: B
DESCRIPTION: INNER DOOR ASSY, ULT 191

BILL OF MATERIALS			
ITEM	QTY	PART NO	DESCRIPTION (1444439)
1	4	144170	SHELF PILASTER ALUM 48" ULT
2	8	140848	SHELF SUPPORT
3	20	105044	SCRW FHMS, 8-32 UNCX0.75
4	4	144375	SHELF ULT 191

MODEL				
ITEM	NSSUF 281	NSSUF 241	NSSUF 191	NSSUF 151
4	140849	144286	144375	155422

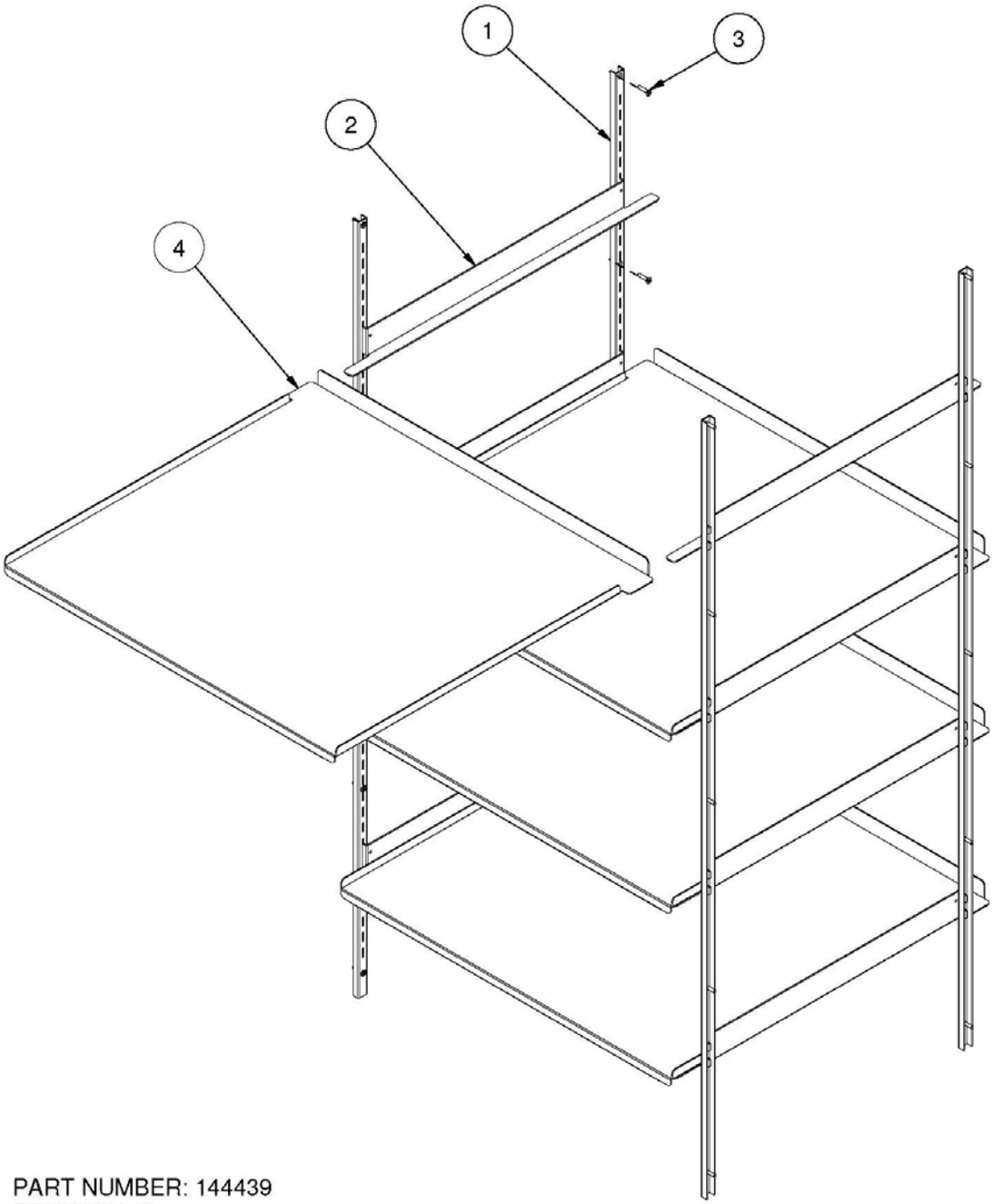

PART NUMBER: 144439
REVISION: C
DESCRIPTION: SHELF ASSY, ULT 191

BILL OF MATERIALS			
ITEM	QTY	PART NO	DESCRIPTION
1	1	144303	SENSOR BRACKET, ULT
2	1	155840	SENSOR GUARD CF
3	4	144447	GROMMET RUBBER 1/4 ID
4	4	001352	SCREW MS PH 8-32X3/8 ZN TH-C
5	1	147513	SENSOR RTD 1000 OHM 6 FT
6	2	001530	NYLON CABLE TIE 3-3/8"

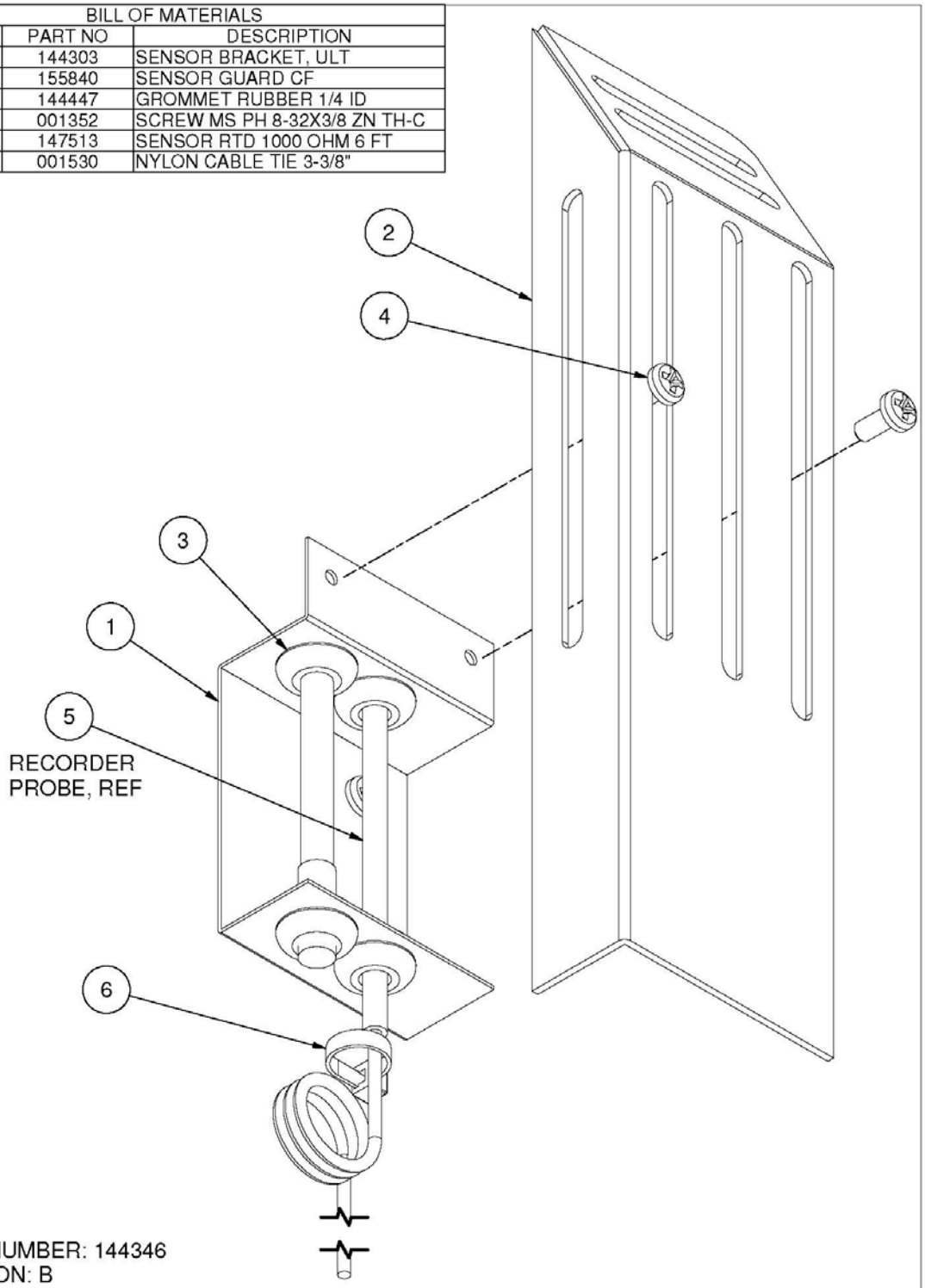

PART NUMBER: 144346
REVISION: B
DESCRIPTION: SENSOR ASSY/INSTALL INSTR CF

BILL OF MATERIALS			
ITEM	QTY	PART NO	DESCRIPTION
2	1	142770	OIL SEPARATOR TEMPRITE
9	1	144949	DRIER ADK05 3 S STD
10	1	153722	HEAT EXCHANGER ASSY, ULT
12	3	104606	TUBE CLAMP-3/8" W/VINYL COAT
13	.117 GA	142771	OIL ICI EMKARATE RL22HB-ULT
19	1	144347	CAP TUBE, CASCADE (LONG)
20	1	144348	CAP TUBE, CASCADE (SHORT)
28	1	144470	SUCTION ACCUMULATOR PN HX3701
40	1	144469.	COMP. RFT42C1E-PFV-282 LO STAGE
44	1	144469	COMP RFT42C1E-PFV-202 HI STAGE
45	1	144466	CONDENSER W/RIFLED TUBES - ULT (LARGE)
46	2	144467	FAN MOTOR,230V ULT COND.
47	1	144468	RECEIVER TANK #9021
51	2	144947	COMPRESSOR MTG KIT (SPACER&SLV
52	1	144461	FAN SHROUD TOP ULT's
53	1	144462	FAN SHROUD, ULT's

MODEL			
ITEM	115/1/60	208-230/1/60	220/1/50
40, 44	147501	144469	147703
	COMP RFT42C1E-PFA-202 HI STAGE	COMP RFT42C1E-PFV-202 HI STAGE	COMP RFT42C1E-PFZ-202 HI STAGE
46	147502	144467	144467
	FAN MOTOR,115V ULT COND.	FAN MOTOR,230V ULT COND.	FAN MOTOR,230V ULT COND.

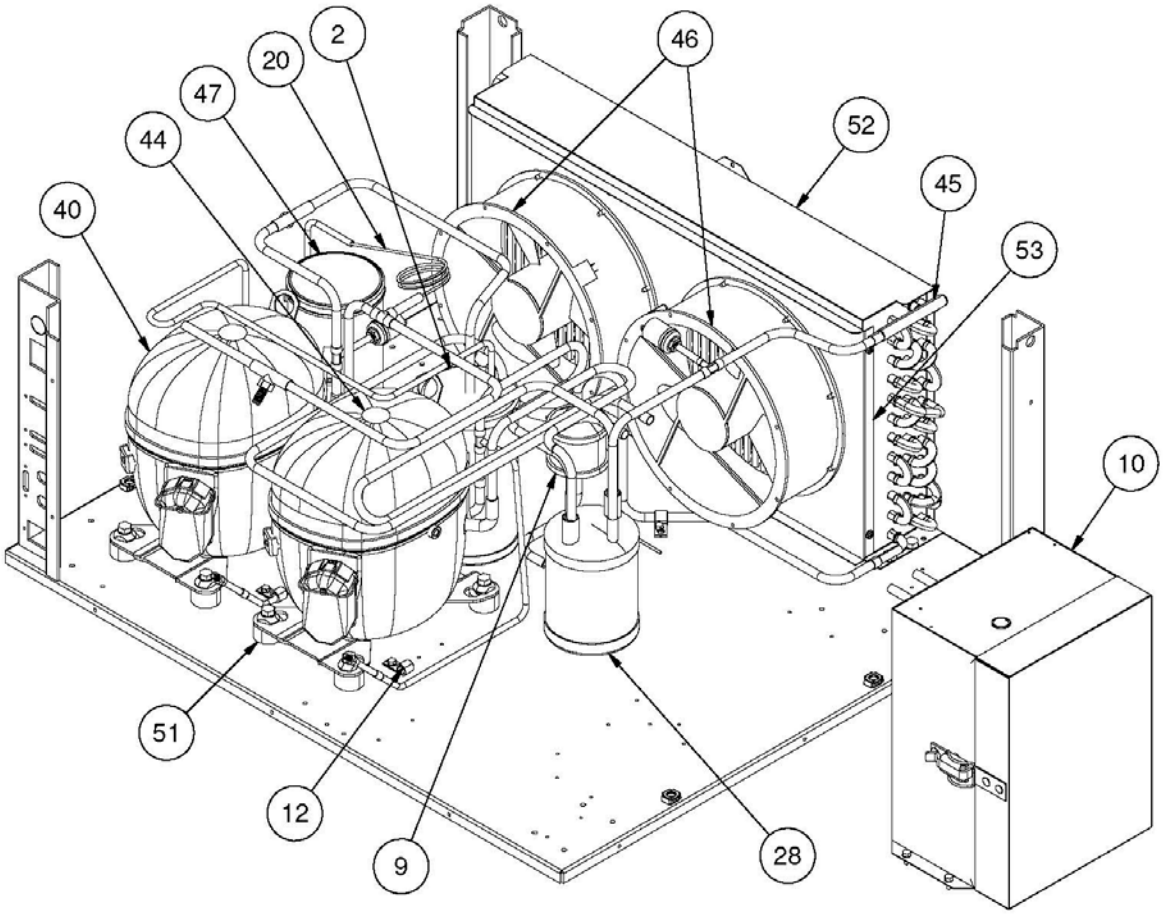

PART NUMBER: 144353
REVISION: C
DESCRIPTION: COND UNIT, MECH ASSY ULT

BILL OF MATERIALS			
ITEM	QTY	PART NUMBER	DESCRIPTION
1	2	139330	BATTERY#BP1.2-12-T1 SEALD LEAD
2	1	139261	ALARM #PL22SFBZR24 BZR/FLASHER
3	2	139695	LEG LEVELER 1/2-13X2-1/2"ZN PL
4	2	147424	BOLT 1/2-13X5" CARRIAGE GALV
5	2	147425	STAND-OFF SPACER, ULT
6	1	144943	AIR FILTER, RIGID 14X25X1/4ULT
7	2	148370	FOAM SOUND DEAD. 1/2x12-1/8x24

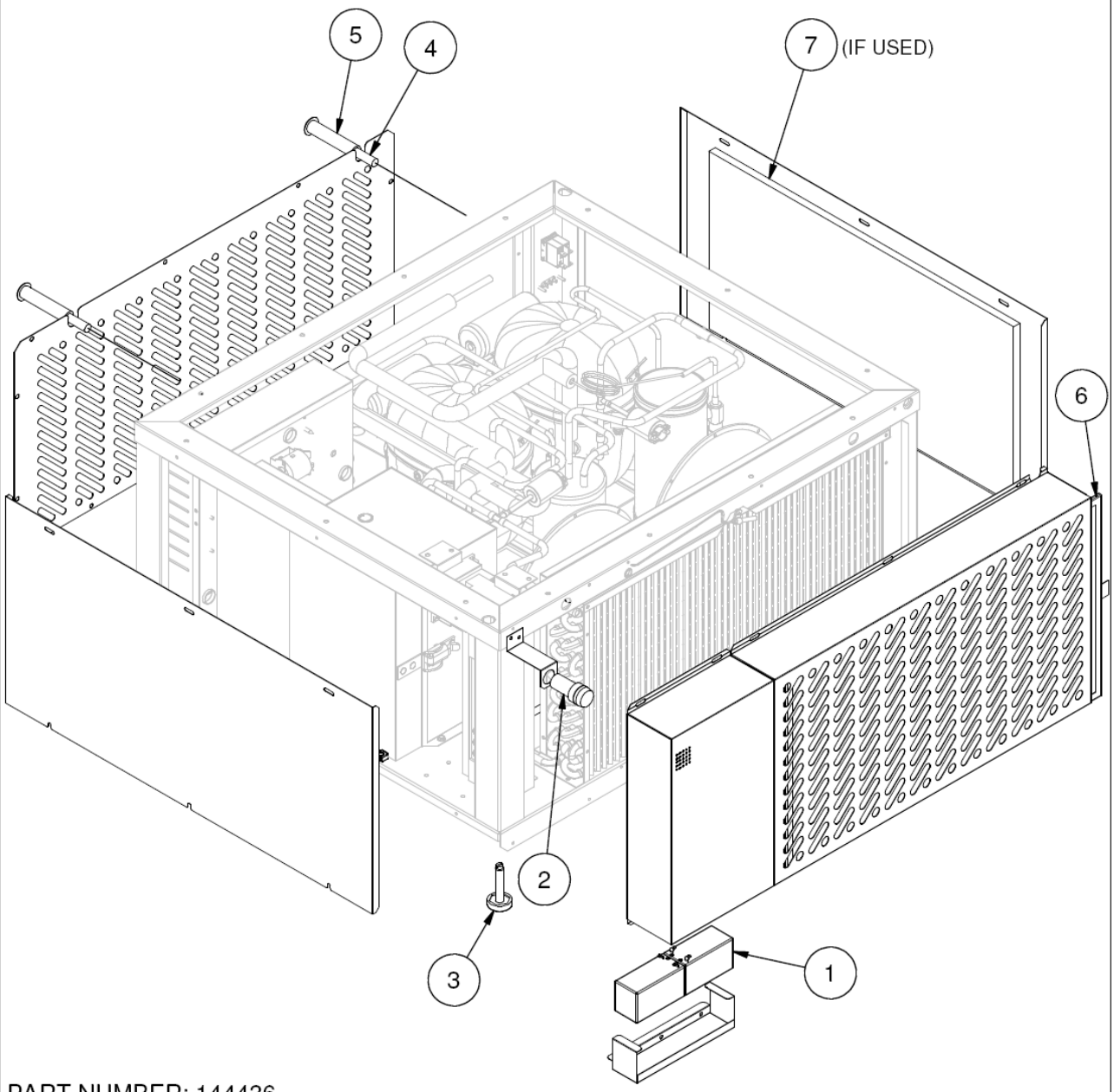

PART NUMBER: 144436
REVISION: C
DESCRIPTION: BOTTOM ASSY, ULT 191

BILL OF MATERIALS			
ITEM	QTY	PART NUMBER	DESCRIPTION
1	1	127795	CORDSET CONN. MALE
2	1	139336	BREAKER SCHURTER 4435.0013 20A
3	3	133165	TERMINAL BLOCK, WM5750-ND
4	6	109810	SCREW MS PH 6-32X1 ZN PH TC
5	1	139281	BREAKER 3 AMP CTB-B-B-03
6	1	139282	BREAKER 7 AMP CTB-B-B-07
7	2	139286	BREAKER LOCKWSHR TYCO #55-025B
8	1	119401	SENSOR,DIXELL CONTROL 5 FT LG
9	1	147510	PCO - TRANSDUCER ASSY, ULT
10	1	147649	ELECT BX ASSY, /4 ULT's
11	1	147670	ELECT BOX ASSY, 230v ULT's
12	1	002369	CLAMP 1/4" RICHO N4
13	5	147697	WIRE CLIP NYLON W/DART MOUNT

MODEL			
ITEM	115/1/60	208-230/1/60	220/1/50
10	147716	147649	147708
	ELECT BX ASSY, /0 ULT's	ELECT BX ASSY, /4 ULT's	ELECT BX ASSY, /5 ULT's
11	147515	147670	147670
	ELECT BOX ASSY, 115v ULT's	ELECT BOX ASSY, 230v ULT's	ELECT BOX ASSY, 230v ULT's

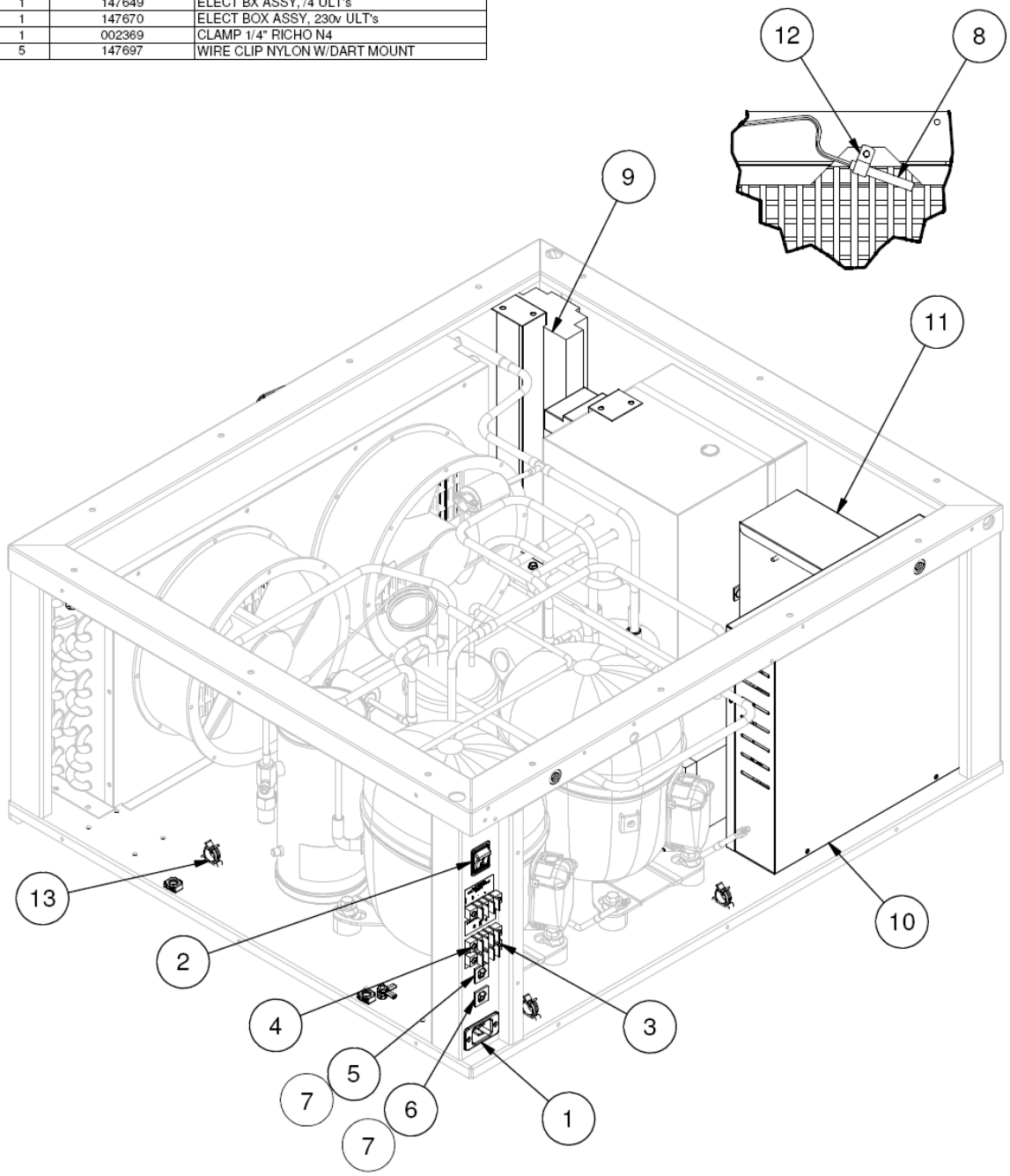

PART NUMBER: 144354
REVISION: C
DESCRIPTION: COND UNIT ASSY, WIRING ULT

BILL OF MATERIALS			
ITEM	QTY	PART NO	DESCRIPTION (153784)
1	1	147650	VOLTAGE STABILIZER BASE ULT
3	1	139233	SURGE SUPPRESSOR LV275DI-Q4
4	2	139219	RELAY SSR #RA2A23D25 2 POLE
19	4	141303	SPACER MOUNTING SNAP IN PCB
20	7	001352	SCREW MS PH 8-32X3/8 ZN TH-C
25	1	139262	POWER SUPPLY #PSC-60B 24VDC
26	2	145839	SENSOR/CURRENT SWITCH, ULT's
30	2	*	CAPACITOR RUN 115V 440/85 MFD
64	2	*	RELAY 115 V (ULT START COMPONENT)
87	1	147305	WIRE HARNESS 6-PIN CONNECTOR
88	1	147306	WIRE HARNESS 3-PIN CONNECTOR
93	2	*	CAPACITOR START 115 V
99	1	092060	TAPE DOUBLE FACED 1/2" (VHB)"

MODEL			
ITEM	DESCRIPTION	VOLTAGE	PART NO
30	CAPACITOR RUN	115 / 60	147714
		230 / 60	139308
		220 / 50	144948
64	RELAY	115 / 60	153781
		230 / 60	147699
		220 / 50	153783
93	CAPACITOR START	115 / 60	153780
		230 / 60	146698
		220 / 50	153782

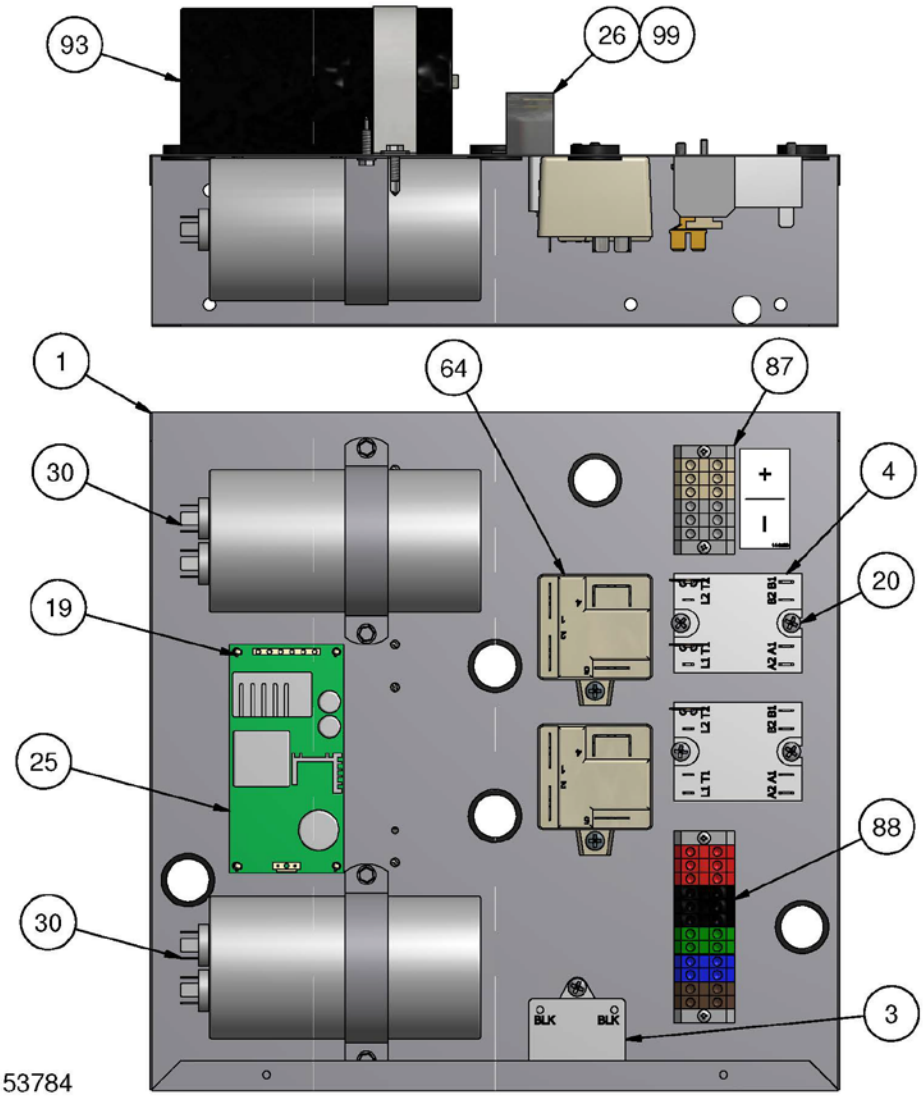

PART NUMBER: 153784
REVISION: A
DESCRIPTION: ELECT BX ASSY /0 ULT's W/START CAP

8. REFRIGERATION SCHEMATIC

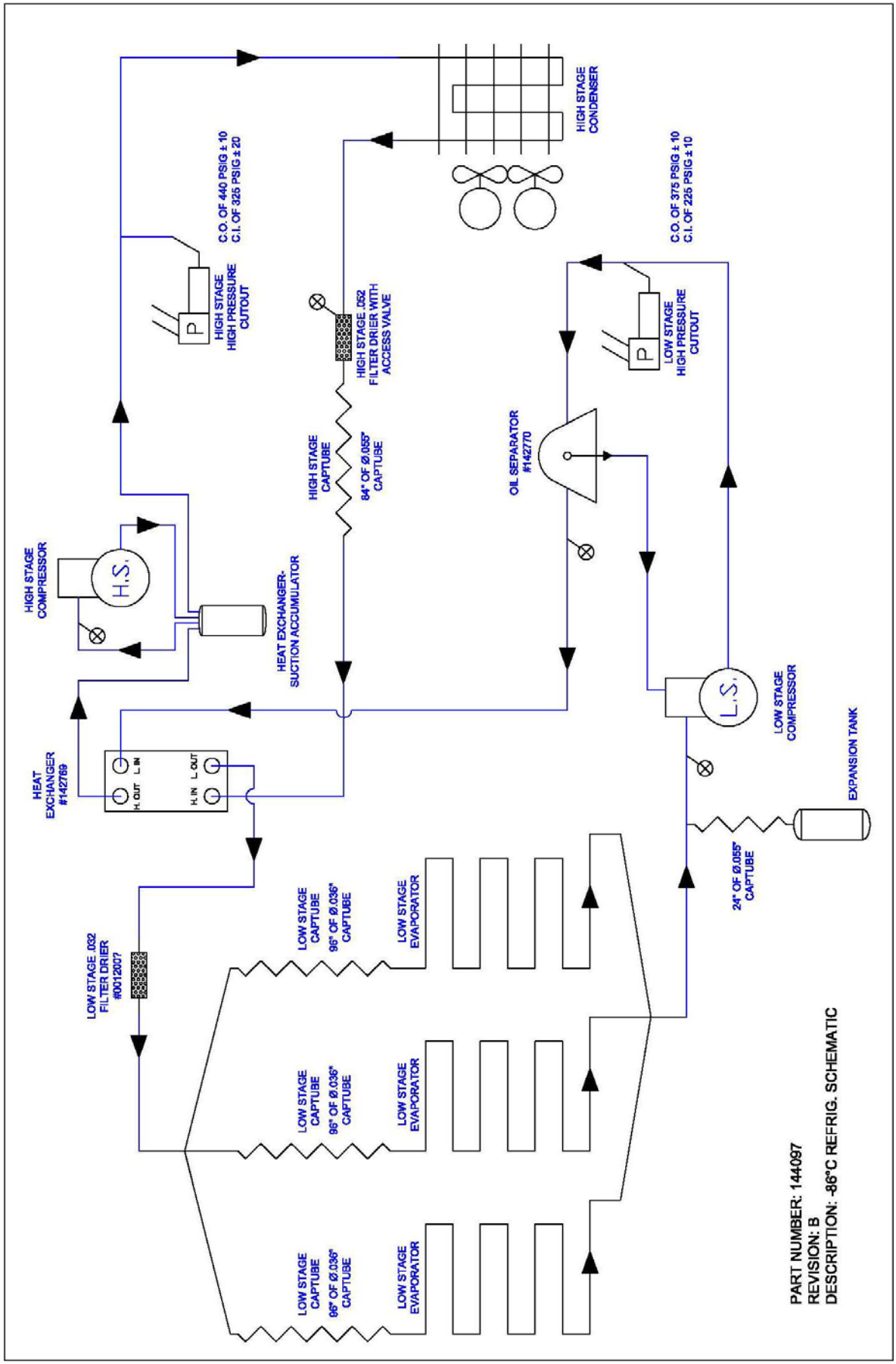

9. ELECTRICAL SCHEMATICS

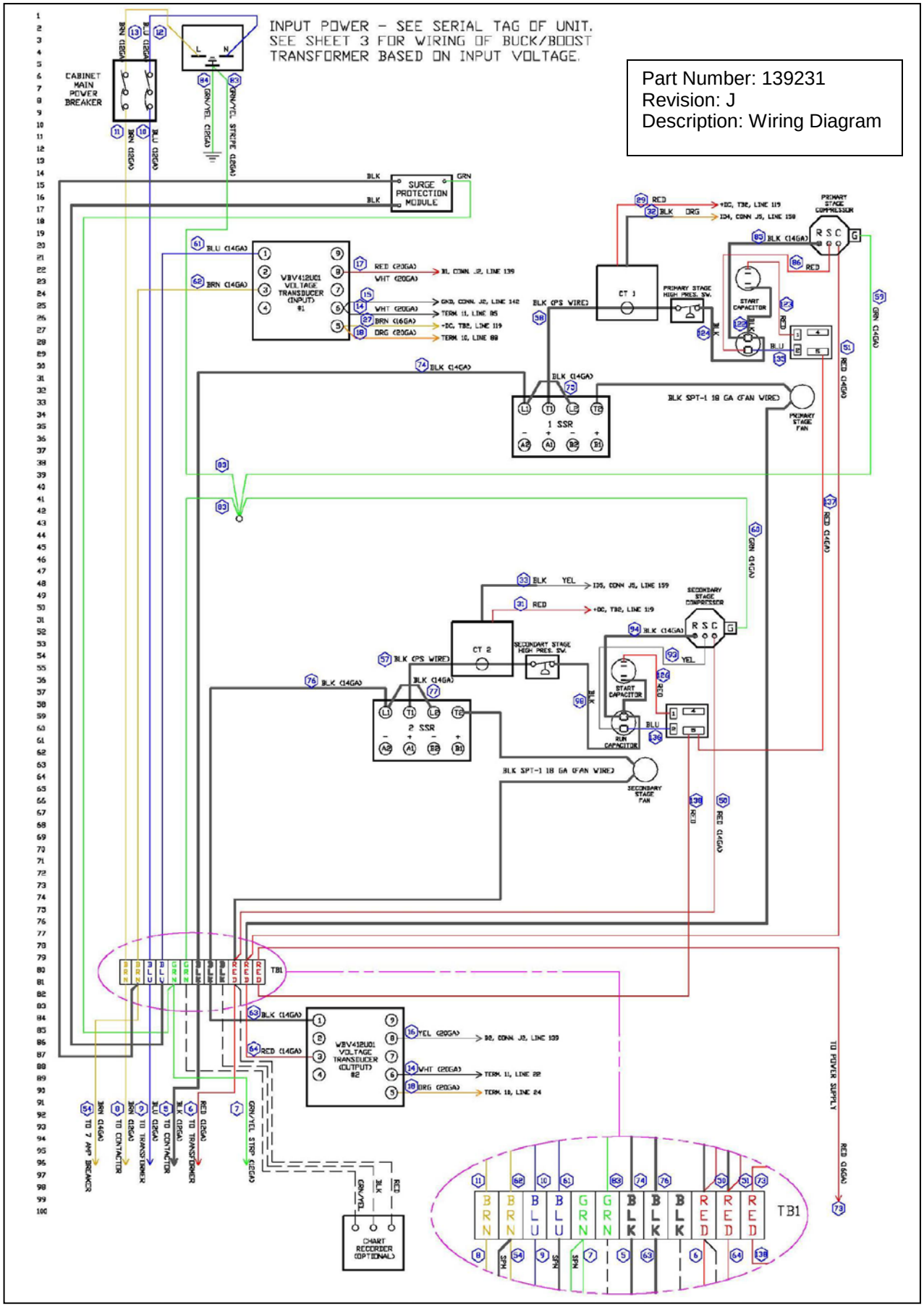

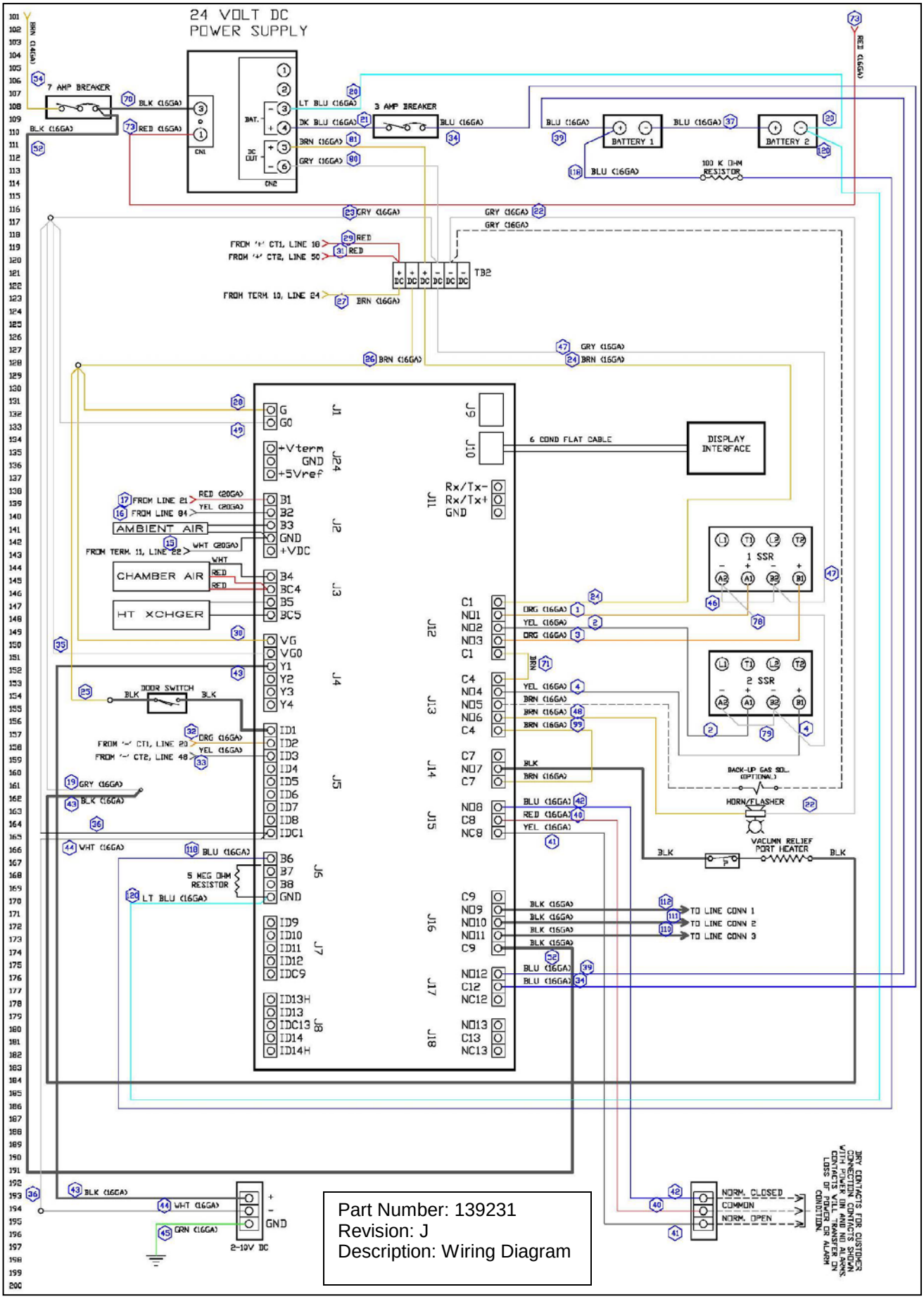

Part Number: 139231
Revision: J
Description: Wiring Diagram

120V WIRING

Part Number: 139231
Revision: J
Description: Wiring Diagram

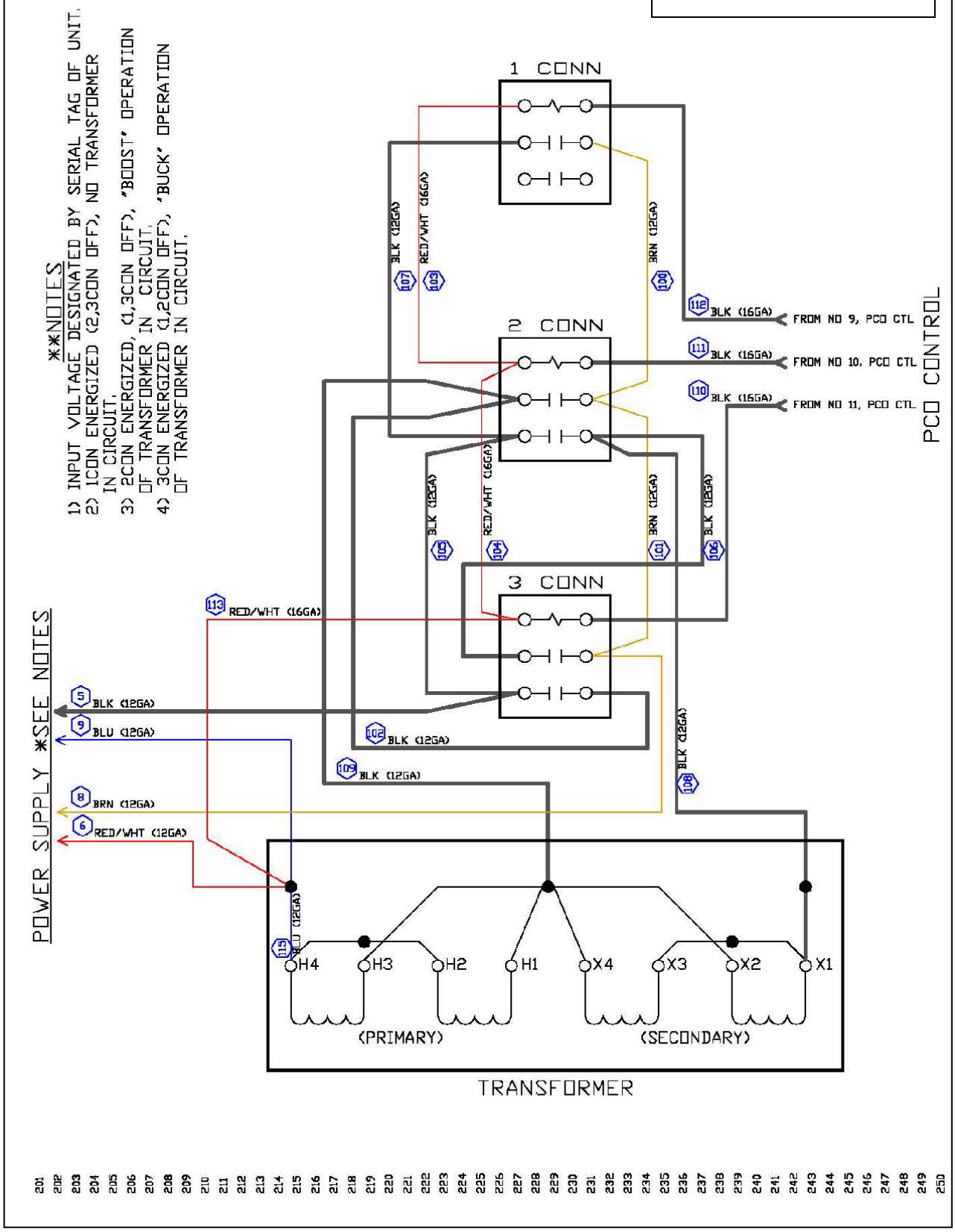

230V WIRING

Part Number: 139231
Revision: J
Description: Wiring Diagram

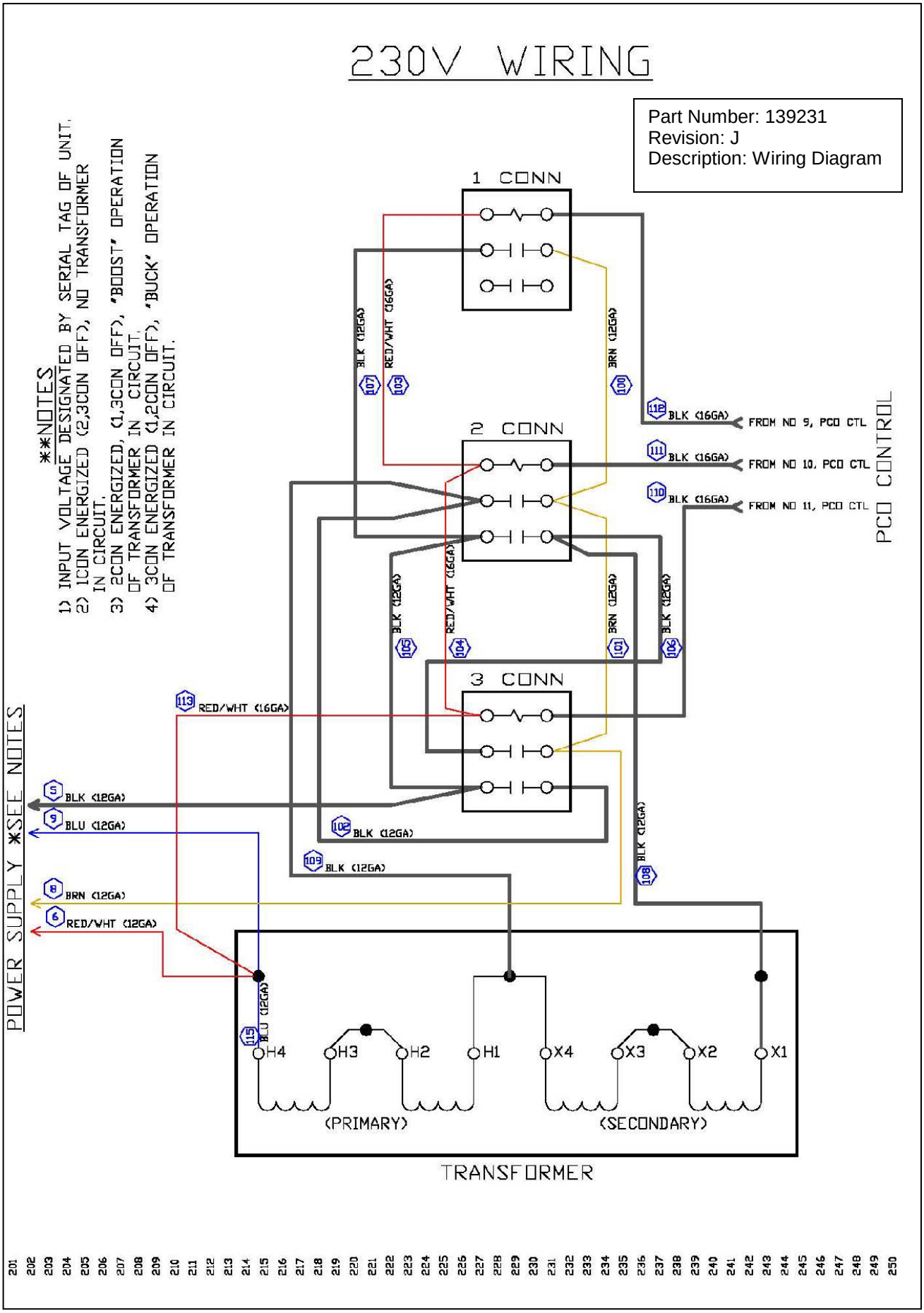

10. MAINTENANCE SERVICE AND ANALYSIS GUIDE

MALFUNCTION	POSSIBLE CAUSE	SOLUTION
HS compressor will not start - no hum	1. Service cord unplugged	1. Plug in service cord
	2. Main cabinet circuit breaker	2. Reset cabinet circuit breaker to on position
	3. Cabinet temperature probe	3. Replace cabinet probe
	4. Start components defective	4. Determine reason and replace
	5. Relay failing to close	5. Determine reason, correct or replace
	6. Wiring incorrect	6. Check wiring against the diagram
LS compressor will not start - no hum	1. Improperly wired	1. Check wiring against the diagram
	2. Heat-x-changer probe	2. Remove heat-x-changer cover and verify that probe is taped securely to face of heat-x-changer approx. 4” up from bottom. If probe is secured as explained above, replace probe
	3. Start components defective	3. Determine reason and replace
	4. Relay failing to close	4. Determine reason, correct or replace
Compressor(s) starts and runs but short cycles on overload protector	1. PTCR could be defective	1. Check resistance, replace if necessary
	2. Overload defective	2. Check current, replace overload protector
	3. Excessive head pressure	3. Check ventilation or restriction in refrigeration system
	4. Compressor hot-return gas hot	4. Check refrigerant charge, fix leak if Necessary
Compressor(s) operates long or continuously	1. Short of refrigerant	1. Fix leak, add refrigerant
	2. Control contact stuck	2. Repair or replace
	3. Condenser fan(s) not working	3. Check wiring and/or replace fan(s)
	4. Restriction in refrigeration system	4. Determine location and remove restriction
	5. Dirty condenser	5. Clean condenser
	6. Door gasket not sealed properly	6. Adjust door hinges and latch
	7. Ambient temperature too high	7. Adjust room thermostat lower
Compressor(s) runs fine, but short cycles	1. Overload protector	1. Check wiring diagram
	2. Cold control	2. Differential too close - widen
	3. Overcharge	3. Reduce charge
	4. Air in system	4. Purge and recharge
	5. Undercharge	5. Fix leak, add refrigerant
Relay defective or burned out	1. Incorrect relay	1. Check and replace
	2. Voltage too high or too low	2. Determine reason and correct
Refrigerated space too warm or cold	1. Control setting too high	1. Reset control
	2. Refrigerant overcharge	2. Purge refrigerant
	3. Dirty condenser	3. Clean condenser
	4. Vacuum relief port stuck open	4. Clean or replace check valve
	5. Not operating	5. Determine reason, replace if necessary
	6. Air flow to condenser or blocked	6. Remove obstruction for free air flow
	7. Control setting is too low	7. Reset the control
	8. Control points stuck	8. Replace the control
Re-entry into cabinet too long	1. Vacuum relief port iced over	1. Manually push in check valve to ensure free operation, if stuck closed, remove valve, clean or replace
	2. Vacuum relief heater	2. Door handle may needed adjusted to activate heater